520/600 Series

VOLUME 1

General Program Library

WANG

520/600 Series

Volume 1

General Program Library

© Wang Laboratories, Inc., 1972

WANG LABORATORIES, INC.

836 NORTH STREET, TEWKSBURY, MASSACHUSETTS 01876, TEL. (617) 851-7311, TWX 710 343-6769, TELEX 94-7421

Warranty Disclaimer and Consequential Damages

The programming staff of Wang Laboratories, Inc. has taken due care to prepare this program package, including research, development, and testing to ascertain its effectiveness. Wang Laboratories, Inc. and its subsidiaries make no expressed or implied warranty of any kind with regard to this program package and its related material. In no event shall Wang Laboratories, Inc. or its subsidiaries be liable for incidental or consequential damages in connection with or arising out of the furnishing, performance or use of any of its programs.

Proprietary Rights

This program package is a company proprietary item. Tape cassettes of programs may not be reproduced without the written consent of Wang Laboratories, Inc.

Payment Address

The fee for a package is to be remitted directly to Wang Laboratories, Inc. at 836 North Street, Tewksbury, Massachusetts 01876. No agent or representative is charged with the authority to accept payment on behalf of the administrative offices of Wang Laboratories, Inc.

WANG LABORATORIES, INC.
836 NORTH STREET, TEWKSBURY, MASSACHUSETTS 01876, TEL. (617) 851-7311, TWX 710 343-6769, TELEX 94-7421

INTRODUCTION

Programs of varying complexity and from different fields have been included in this library to provide a sample of the usefulness and versatility of the 520/600 series calculators. Programs have been selected bearing in mind their use and possible application. Each one contains a set of instructions which is very easy to follow; at least one example per program has been given to facilitate checking and enhance comprehension.

In loading the program tape advantage may be taken of the special two part command alpha load program which instructs the calculator to skip the number of blocks indicated by the display and load the next block. The block number of a specific program may be obtained either from the table of contents or from the first page of each program.

The Programming Department of Wang Laboratories is continually striving to provide the user with helpful program libraries and we welcome any suggestions that may further our efforts toward this goal.

John Patino-Bueno

John Patino-Bueno
Wang Laboratories, Inc.

TABLE OF CONTENTS

SIDE 1

BLOCK NO.	PROGRAM TITLE	PROGRAM NO.	PAGE NO.
1	LINEAR REGRESSION ANALYSIS	1000-2-ST3	3
2	NON-LINEAR REGRESSION: LEAST SQUARES PARABOLA	1001-2-ST3	8
3	NON-LINEAR REGRESSION: LEAST SQUARES POWER CURVE	1002-2-ST3	13
4	LEAST SQUARES FIT - EXPONENTIAL	1003-2-ST3	17
5	LEAST SQUARES FIT - EXPONENTIAL (General)	1004-2-ST3	21
6	LEAST SQUARES FIT - HYPERBOLIC	1005-2-ST3	25
7	t-STATISTICS, TESTING POPULATION MEAN $u = u_o$	1006-2-ST2	29
8	t-STATISTICS, TESTING CORRELATION COEFFICIENTS $\rho = 0$	1007-2-ST2	32
9	t-STATISTICS, TESTING LINEAR REGRESSION	1008-2-ST2	36
10	t-STATISTICS, TESTING FOR SIGNIFICANCE DIFFERENCE IN MEAN (Paired)	1009-2-ST2	40
11	t-STATISTICS TESTING FOR SIGNIFICANCE DIFFERENCE IN MEAN (Unpaired)	1010-2-ST2	44
12	χ^2-STATISTICS, TESTING POPULATION VARIANCE $\sigma^2 = \sigma^2$	1011-2-ST2	48
13	χ^2-STATISTICS FOR OBSERVED FREQUENCIES AND EXPECTED FREQUENCIES	1012-2-ST2	51
14	POISSON DISTRIBUTION	1013-2-ST2	54
15	MEAN, VARIANCE, STANDARD DEVIATION (Ungrouped)	1014-2-ST1	56
16	MEAN, VARIANCE, STANDARD DEVIATION (Grouped)	1015-2-ST1	59

TABLE OF CONTENTS (CONT)

SIDE 1

BLOCK NO.	PROGRAM TITLE	PROGRAM NO.	PAGE NO.
17	RANDOM NUMBER GENERATOR	1016-2-ST6	62
18	MATRIX ADDITION	1017-2-MA2	65
19	MATRIX SUBTRACTION	1018-2-MA2	69
20	MATRIX MULTIPLICATION	1019-2-MA2	73
21	MATRIX INVERSION	1020-2-MA3	78
22	SOLUTION OF n SIMULTANEOUS EQUATIONS	1021-2-MA3	82
23	FOURIER ANALYSIS	1022-2-MA2	86
24	FORMULAE EVALUATION	1023-6-MA6	91
25	BASE A $\rightleftarrows$ BASE B	1024-2-MA6	94
26	SIMPSON'S RULE - f(x) KNOWN	1025-2-MA4	96
27	SIMPSON'S RULE - f(x) UNKNOWN	1026-2-MA4	98
28	HYPERBOLIC FUNCTIONS	1027-2-MA1	101
29	VECTOR ANALYSIS AND OPERATIONS	1028-2-MA3	103
30	ROOTS OF FUNCTIONS (Half Interval Search)	1029-2-MA2	115
31	ROOTS OF EQUATIONS	1030-6-MA2	119
32	GAMMA FUNCTION	1031-2-MA1	129
33	COMPLEX NUMBER CALCULATOR	1032-2-MA6	132
34	POLAR TO RECTANGULAR, RECTANGULAR TO POLAR	1033-2-MA1	137
35	INVOLUTE	1034-2-ME1	139
36	SPRING DESIGN-COMPRESSION AND EXTENSIONS SPRINGS	1035-2-ME1	142
37	STRESS AND STRAIN FROM A 45° ROSETTE	1036-2-ME1	147

TABLE OF CONTENTS (CONT)

SIDE 1

BLOCK NO.	PROGRAM TITLE	PROGRAM NO.	PAGE NO.
38	PLANETARY-EPICYCLIC GEAR RATIOS	1037-2-ME1	152
39	FOUR GEAR TRAIN	1038-2-ME1	155

SIDE 2

1	FLOW CALCULATION - VENTURI METER	1039-2-CE2	163
2	CHEZY-MANNING EQUATION	1040-2-CE2	172
3	RECTANGULAR WEIR	1041-2-CE2	177
4	FLOW IN PIPE	1042-2-CE2	181
5	PANHANDLE FORMULA	1043-2-CE2	184
6	HARDY-CROSS BALANCING OF A PIPE NETWORK	1044-2-CE2	187
7	CANTILEVER BEAM - INTERMEDIATE LOAD AT A POINT	1045-2-CE3	203
8	CANTILEVER BEAM - UNIFORM LOAD	1046-2-CE3	206
9	CANTILEVER BEAM - TRIANGULAR LOAD	1047-2-CE3	209
10	END SUPPORTED BEAM - CENTER LOAD	1048-2-CE3	212
11	END SUPPORTED BEAM - UNIFORM LOAD	1049-2-CE3	215
12	END SUPPORTED BEAM - TRIANGULAR LOAD	1050-2-CE3	218
13	BOND DOLLAR PRICE AND YIELD	1051-2-BF2	221
14	PERIODIC PAYMENT	1052-2-BF2	228
15	ADD-ON INTEREST PAYMENTS	1053-2-BF2	231
16	COMPOUND INTEREST AND AMOUNT	1054-2-BF2	234
17	PRESENT VALUE OF A SERIES OF YEARLY CASH FLOWS	1055-2-BF1	237

TABLE OF CONTENTS (CONT)

SIDE 2

BLOCK NO.	PROGRAM TITLE	PROGRAM NO.	PAGE NO.
18	PERIODIC INVESTMENT	1056-2-BF2	241
19	SUM FROM INVESTMENT	1057-2-BF2	244
20	DECLINING BALANCE DEPRECIATION RATE	1058-2-BF1	247
21	DEPRECIATION CHARGE (Declining Balance)	1059-2-BF1	249
22	SALVAGE VALUE (Book)	1060-2-BF1	251
23	DEPRECIATION (Sum of the Digits)	1061-2-BF1	253
24	AVERAGE LIFE (Annual, Semi- annual)	1062-2-BF2	256
25	BASIC E.E. DEMO	1063-2-EE2	265
26	DESIGN E.E. DEMO A	1064-2-EE2	285
27	DESIGN E.E. DEMO B - BAND PASS FILTER DESIGN	1065-2-EE2	296
28	DESIGN E.E. DEMO C	1066-2-EE2	301
29	TCHEBYSHEFF LOW PASS FILTER DESIGN	1067-2-EE2	307
30	BUTTERWORTH FILTER DESIGN	1068-2-EE2	312
31	Y - Δ AND Δ - Y TRANSFORMATION	1069-2-EE1	321

Side 1

This page intentionally left blank

520/600 SERIES PROGRAM DESCRIPTION

TITLE	NO.
LINEAR REGRESSION ANALYSIS	1000-2-ST3
	EQUIPMENT: 520-2/600-2

REGISTERS	MARKS	DATE	PROGRAMMER
00 - 10, 14, 15	0000, 1000 → 1002, 1100	March 16, 1971	James J. Gibson

BLOCK	VERIFY NO. – PRINT	NO. OF STEPS – PRINT	VERIFY NO. – DISPLAY	NO. OF STEPS – DISPLAY
1	2133	159	2123	159

PROGRAM DESCRIPTION

The program computes the least square estimates $\hat{a}$, $\hat{b}$ to the line $y = a + bx$. It also gives the correlation coefficient and standard error of estimate.

Sample Correlation Coefficient, $r = \dfrac{n\Sigma xy - (\Sigma x)(\Sigma y)}{\sqrt{\left[n\Sigma x^2 - (\Sigma x)^2\right]\left[n\Sigma y^2 - (\Sigma y)^2\right]}}$

$$\hat{b} = \frac{n\Sigma xy - (\Sigma x)(\Sigma y)}{n\Sigma x^2 - (\Sigma x)^2}$$

$$\hat{a} = \frac{\Sigma y - \hat{b}\,\Sigma x}{n}$$

Standard Error of Estimate, $S_{y \cdot x} = \dfrac{1}{n}\sqrt{n\Sigma y^2 - (\Sigma y)^2 - \dfrac{(n\Sigma xy - \Sigma x \Sigma y)^2}{n\Sigma x^2 - (\Sigma x)^2}}$

© Wang Laboratories, Inc., 1972

Printed in U.S.A.

PROGRAM TITLE	NUMBER
LINEAR REGRESSION ANALYSIS	1000-2-ST3
	PAGE

OPERATING PROCEDURE

PRINTER

1. Key PRIME, LOAD PROGRAM, VERIFY PROGRAM: Display should read 2133;
2. Depress f(x), PRINTER ON;
3. Key 00;
4. Key x_i, GO ,
   y_i, GO ;

   x_i labeled by "X"

   y_i labeled by "Y"

   Repeat step 4 for all (x_i, y_i) data;
5. Key SEARCH 0;
6. READ: b labeled by "B" ,
   a labeled by "A" ,
   r labeled by "C",
   $S_{y \cdot x}$ labeled by "E";

DISPLAY

1. Key PRIME, LOAD PROGRAM, VERIFY PROGRAM: Display should read 2123;
2. Depress f(x);
3. Key 00;
4. Key x_i, GO ,
   y_i, GO ;

   Repeat step 4 for all (x_i, y_i) data;
5. Key SEARCH 0 ;
6. READ: b GO,
   a GO,
   r GO,
   $S_{y \cdot x}$

EXAMPLE: Calculate a, b, r and $S_{y \cdot x}$ for the following data:

x	2	-2	6	5	1
y	4	12	-4	-2	6

© Wang Laboratories, Inc., 1970

PROGRAM TITLE	NUMBER
LINEAR REGRESSION ANALYSIS	1000-2-ST3
	PAGE

1. Key PRIME, LOAD PROGRAM, VERIFY PROGRAM: display should read 2133;

2. Depress f(x) , PRINTER ON;

3. Key 00 ;

4. Key 2 GO, 4 GO,
   2 CH SIGN GO, 1 2 GO,
   6 GO, 4 CH SIGN GO,
   5 GO, 2 CH SIGN GO,
   1 GO, 6 GO;

5. Key SEARCH 0;

6. READ:

2.00000000	X
4.00000000	Y
-2.00000000	X
12.00000000	Y
6.00000000	X
-4.00000000	Y
5.00000000	X
-2.00000000	Y
1.00000000	X
6.00000000	Y
-2.00000000	B
8.00000000	A
-.99999999	C
0.00000000	E

1. Key PRIME, LOAD PROGRAM, VERIFY PROGRAM: display should read 2123;

2. Depress f(x) ;

3. Key 00;

4. Key 2 GO, 4 GO,
   2 CH SIGN GO , 1 2 GO,
   6 GO , 4 CH SIGN GO,
   5 GO, 2 CH SIGN GO ,
   1 GO, 6 GO;

5. Key SEARCH 0 ;

6. READ: - 2.000000000, GO,
   8.000000000, GO,
   - .9999999999, GO,
   0.000000000

© Wang Laboratories, Inc., 1970

OPTION 1: If you wish to find the y corresponding to a particular x on the basis of calculated a and b,

Key x_i, 01 ,

READ: y_i;

EXAMPLE: Suppose you wish to find the y corresponding to x = .5 on the basis of the calculated a and b in the example;

Key . 5 , 01 ,

READ: 7.000000000

.50000000 X
7.00000000 Y

OPTION 2: If you make a mistake in keying in an (x_i, y_i) number and have already put it into storage with the GO command, immediately key the wrong (x_i, y_i) according to:

Key x_i , 02 ,

y_i , GO ;

This will subtract the (x_i, y_i) number from the appropriate summations and decrease count by one. If you have a printer, the wrong (x_i, y_i) value will be reprinted with both x_i and y_i labeled "E" for "Error". Now proceed as in step 4, starting with the correct (x_i, y_i) number until all data is keyed in.

EXAMPLE: Suppose you key in (6,4) instead of (6,-4);

Key 6 , 02 ,

4 , GO;

Now proceed as in step 4 starting with point (6,-4) and continue with the rest of the data points.

© Wang Laboratories, Inc., 1970

NOTE: You must correct the complete (x_i, y_i) data point. You cannot correct an individual x_i or y_i. If you key an x_i wrong, key in y_i and then make the correction on (x_i, y_i).

© Wang Laboratories, Inc., 1970

520/600 SERIES PROGRAM DESCRIPTION

TITLE	NO.
NON-LINEAR REGRESSION: LEAST SQUARES FIT - PARABOLA	1001-2-ST3
	EQUIPMENT: 520-2/600-2
REGISTERS: 00-11, 14, 15	MARKS: 0000, 1000 1002 1100
	DATE: March 15, 1971
	PROGRAMMER: James J. Gibson

BLOCK	VERIFY NO. – PRINT	NO. OF STEPS – PRINT	VERIFY NO. – DISPLAY	NO. OF STEPS – DISPLAY
2	3567	257	3575	257

PROGRAM DESCRIPTION

This program calculates the coefficients fitting data points to $y = a + bx + cx^2$

The coefficients a, b, c are obtained by solving the following set of simultaneous equations:

$$an + b\Sigma x_i + c\Sigma x_i^2 = \Sigma y_i$$

$$a\Sigma x_i + b\Sigma x_i^2 + c\Sigma x_i^3 = \Sigma x_i y_i$$

$$a\Sigma x_i^2 + b\Sigma x_i^3 + c\Sigma x_i^4 = \Sigma x_i^2 y_i$$

Where n = number of (x_i, y_i) data points.

© Wang Laboratories, Inc., 1972

Printed in U.S.A.

PROGRAM TITLE	NUMBER
NON-LINEAR REGRESSION - LEAST SQUARES PARABOLA	1001-2-ST3
	PAGE

OPERATING PROCEDURE

PRINTER

1. Key PRIME, LOAD PROGRAM, VERIFY PROGRAM: Display should read 3567
2. Depress f(x), PRINTER ON ;
3. Key 00 ;
4. Key x_i, GO,
   y_i, GO;

   x_i Labeled by "X"

   y_i Labeled by "Y"

   Repeat step 4 for all (x_i, y_i) data;
5. Key SEARCH 0;
6. READ: a labeled by "A",
   b labeled by "B",
   c labeled by "C" ;

DISPLAY

1. Key PRIME, LOAD PROGRAM VERIFY PROGRAM: Display should read 3575
2. Depress f(x) ;
3. Key 00;
4. Key x_i, GO ,
   y_i, GO ;

   Repeat step 4 for all (x_i, y_i) data;
5. Key SEARCH 0 ;
6. READ: a, GO ,
   b, GO ,
   c;

EXAMPLE: Find the best fit parabolic curve to the following data:

x	0	1	2	3	4
y	1	6	17	34	57

© Wang Laboratories, Inc., 1970

PROGRAM TITLE	NUMBER
NON-LINEAR REGRESSION - LEAST SQUARES PARABOLA	1001-2-ST3
	PAGE

1. Key PRIME, LOAD PROGRAM, VERIFY PROGRAM: Display should read 3567;

2. Depress f(x) , PRINTER ON ;

3. Key 00;

4. Key 0 GO, 1 GO,
   1 GO, 6 GO,
   2 GO, 1 7 GO,
   3 GO, 3 4 GO,
   4 GO, 5 7 GO;

5. Key SEARCH 0;

6. READ:

0.00000	X
1.00000	Y
1.00000	X
6.00000	Y
2.00000	X
17.00000	Y
3.00000	X
34.00000	Y
4.00000	X
57.00000	Y
1.00000000	A
2.00000000	B
3.00000000	C

1. Key PRIME, LOAD PROGRAM, VERIFY PROGRAM: Display should read 3575;

2. Depress f(x) ;

3. Key 00;

4. Key 0 GO, 1 GO,
   1 GO, 6 GO,
   2 GO, 1 7 GO,
   3 GO, 3 4 GO,
   4 GO, 5 7 GO;

5. Key SEARCH 0 ;

6. READ: 1.000000000 GO ,
   2.000000000 GO ,
   3.000000000;

© Wang Laboratories, Inc., 1970

OPTION 1: If you wish to find the y corresponding to a particular x on the basis of calculated coefficients;

Key x_i, 01,

READ: y_i ;

EXAMPLE: Suppose you wish to find the y corresponding to x = 2.5 on the basis of the calculated a and b in the example.

Key 2.5, 01;

READ: 24.75000000

2.50000000 X
24.75000000 Y

OPTION 2: If you make a mistake in keying in an (x_i, y_i) number and have already put it into storage with the GO command, immediately key the wrong (x_i, y_i) number according to:

Key x_i, 02,

y_i, GO ;

This will subtract the (x_i, y_i) number from the appropriate summations and decrease count by one. If you have a printer, the wrong (x_i, y_i) value will be reprinted with both x_i and y_i labeled "E" for "Error". Now proceed as in Step 4, starting with the correct (x_i, y_i) number until all data is keyed in.

EXAMPLE: Suppose you key in (2,15) instead of (2,17);

Key 2, 02,

15, GO;

Now proceed as in step 4, starting with point (2,17) and continue with the rest of the data points.

© Wang Laboratories, Inc., 1970

NOTE: You must correct the complete (x_i, y_i) data point. You cannot correct an individual x_i or y_i. If you key an x_i wrong, key in y_i, and then make the correction on (x_i, y_i).

© Wang Laboratories, Inc., 1970

520/600 SERIES PROGRAM DESCRIPTION

TITLE	NO.
NON-LINEAR REGRESSION: LEAST SQUARES FIT - POWER CURVE	1002-2-ST3
	EQUIPMENT: 520-2/600-2
REGISTERS: 00 → 09, 14, 15	MARKS: 0000, 1000 → 1002, 1100
	DATE: March 16, 1971
	PROGRAMMER: James J. Gibson

BLOCK	VERIFY NO. – PRINT	NO. OF STEPS – PRINT	VERIFY NO. – DISPLAY	NO. OF STEPS – DISPLAY
3	2029	150	2017	150

PROGRAM DESCRIPTION

This program calculates coefficients fitting data points to $y = ax^b$. It also calculates the correlation coefficient r.

The coefficients are given by the following equations:

$$b = \frac{n\sum_{1}^{n}(\text{LOG}_e x_i \text{ LOG}_e y_i) - (\sum_{1}^{n}\text{LOG}_e x_i)(\sum_{1}^{n}\text{LOG}_e y_i)}{n\sum_{1}^{n}(\text{LOG}_e x_i)^2 - (\sum_{1}^{n}\text{LOG}_e x_i)^2}$$

$$a = \exp\left[\frac{1}{n}\left\{\sum_{1}^{n}\text{LOG}_e y_i - (\sum_{1}^{n}\text{LOG}_e x_i)b\right\}\right]$$

$$r = \frac{n\sum_{1}^{n}(\text{LOG}_e x_i \text{ LOG}_e y_i) - (\sum_{1}^{n}\text{LOG}_e x_i)(\sum_{1}^{n}\text{LOG}_e y_i)}{\sqrt{\left[n\sum_{1}^{n}(\text{LOG}_e x_i)^2 - (\sum_{1}^{n}\text{LOG}_e x_i)^2\right]\left[n\sum_{1}^{n}(\text{LOG}_e y_i)^2 - (\sum_{1}^{n}\text{LOG}_e y_i)^2\right]}}$$

© Wang Laboratories, Inc., 1972

Printed in U.S.A.

PROGRAM TITLE	NUMBER
NON-LINEAR REGRESSION - LEAST SQUARES POWER CURVE	1002-2-ST3
	PAGE

OPERATING PROCEDURE

1. Key PRIME, LOAD PROGRAM VERIFY PROGRAM: Display should read 2029;
2. Depress f(x), PRINTER ON ;
3. Key 00;
4. Key x_i, GO ,
   y_i, GO ;
   x_i labeled by "X"
   y_i labeled by "Y"
   Repeat step 4 for all (x_i, y_i) data;
5. Key SEARCH 0 ;
6. READ: b labeled by "B" ,
   a labeled by "A" ,
   r labeled by "C" ;

1. Key PRIME, LOAD PROGRAM, VERIFY PROGRAM: Display should read 2017;
2. Depress f(x) ;
3. Key 00;
4. Key x_i, GO ,
   y_i, GO ;
   Repeat step 4 for all (x_i, y_i) data;
5. Key SEARCH 0 ;
6. READ: b GO ,
   a GO ,
   r ;

EXAMPLE: Find the best fit power curve and correlation coefficient for the following data:

x	1	2	3	4	6	7	8
y	.5	2	5	8	18	25	32

1. Key PRIME, LOAD PROGRAM, VERIFY PROGRAM: Display should read 2029;
2. Depress f(x), PRINTER ON;
3. Key 00 ;
4. Key 1 GO, . 5 GO;
   2 GO, 2 GO;
   3 GO, 5 GO;
   4 GO, 8 GO;
   6 GO, 1 8 GO;
   7 GO, 2 5 GO;
   8 GO, 3 2 GO;

1. Key PRIME, LOAD PROGRAM, VERIFY PROGRAM: Display should read 2017;
2. Depress f(x) ;
3. Key 00 ;
4. Key 1 GO, . 5 GO ;
   2 GO, 2 GO ;
   3 GO, 5 GO ;
   4 GO, 8 GO ;
   6 GO, 1 8 GO ;
   7 GO, 2 5 GO ;
   8 GO, 3 2 GO;

© Wang Laboratories, Inc., 1970

5. Key SEARCH 0 ;

6. READ:

1.00000000	X
.50000000	Y
2.00000000	X
2.00000000	Y
3.00000000	X
5.00000000	Y
4.00000000	X
8.00000000	Y
6.00000000	X
18.00000000	Y
7.00000000	X
25.00000000	Y
8.00000000	X
32.00000000	Y
1.998134617	B
.510271410	A
.99965675	C

5. Key SEARCH 0 ;

6. READ: 1.998134617 GO,
.5102714108 GO,
.9996567509 ;

OPTION 1: If you wish to find the y corresponding to a particular x value on the basis of calculated coefficients a and b,

Key x_i, 01,
READ: y_i ;

© Wang Laboratories, Inc., 1970

EXAMPLE: Suppose you wish to find the y corresponding to x = 6.5 on the basis of the calculated a and b in the example.

Key 6 . 5, 01 ;
READ: 21.48382249

6.50000000 X
21.48382249 Y

OPTION 2: If you make a mistake in keying in an (x_i, y_i) number and have already put it into storage with the GO command, immediately key the wrong (x_i, y_i) according to:

Key x_i, 02 ,
y_i, GO ;

This will subtract the (x_i, y_i) number from the appropriate summations and decrease count by one. If you have a printer, the wrong (x_i, y_i) value will be reprinted with both x_i and y_i labeled "E" for error. Now proceed as in step 4, starting with the correct (x_i, y_i) number, until all data points are keyed in.

EXAMPLE: Suppose you key in (3,3) instead of (3,5)

Key 3, 02,
3, GO ;

Now proceed as in step 4, starting with point (3,5) and continuing with the rest of the data points.

NOTE: You must correct the complete (x_i, y_i) data point . You cannot correct an individual x_i or y_i. If you key an x_i wrong, key in y_i and then make the correction on (x_i, y_i).

© Wang Laboratories, Inc., 1970

520/600 SERIES PROGRAM DESCRIPTION

TITLE	NO.
LEAST SQUARE FIT - EXPONENTIAL	1003-2-ST3
	EQUIPMENT: 520-2/600-2

REGISTERS	MARKS	DATE	PROGRAMMER
00 → 09, 14, 15	0000, 1000 → 1002 1100	March 16, 1971	James J. Gibson

BLOCK	VERIFY NO. – PRINT	NO. OF STEPS – PRINT	VERIFY NO. – DISPLAY	NO. OF STEPS – DISPLAY
4	2003	150	1995	150

PROGRAM DESCRIPTION

This program calculates the coefficients fitting data points to $y = ae^{bx}$; it also calculates the correlation coefficient, r.

$$b = \frac{n\Sigma(x_i \operatorname{Log}_e y_i) - (\Sigma x_i)(\Sigma \operatorname{Log}_e y_i)}{n\Sigma x_i^2 - (\Sigma x_i)^2}$$

$$a = \exp\left[\frac{1}{n}\left\{(\Sigma \operatorname{Log}_e y_i) - b\,\Sigma x_i\right\}\right]$$

$$r = \frac{n\Sigma(x_i \operatorname{Log}_e y_i) - (\Sigma x_i)(\Sigma \operatorname{Log}_e y_i)}{\sqrt{\left\{n\Sigma x_i^2 - (\Sigma x_i)^2\right\}\left\{n\Sigma(\operatorname{Log}_e y_i)^2 - (\Sigma \operatorname{Log}_e y_i)^2\right\}}}$$

© Wang Laboratories, Inc., 1972

Printed in U.S.A.

PROGRAM TITLE	NUMBER
LEAST SQUARE FIT - EXPONENTIAL	1003-2-ST3
	PAGE

OPERATING PROCEDURE

PRINTER

1. Key PRIME, LOAD PROGRAM, VERIFY PROGRAM: Display should read 2003;
2. Depress f(x) , PRINTER ON ;
3. Key 00;
4. Key x_i, GO ,
   y_i, GO;

   x_i labeled by "X"

   y_i labeled by "Y"

   Repeat step 4 for all (x_i, y_i) ;
5. Key SEARCH 0;
6. READ: b labeled "B" ,
   a labeled "A" ,
   r labeled "C";

DISPLAY

1. Key PRIME, LOAD PROGRAM, VERIFY PROGRAM: Display should read 1995;
2. Depress f(x) ;
3. Key 00;
4. Key x_i, GO,
   y_i, GO;

   Repeat step 4 for all (x_i, y_i) ;
5. Key SEARCH 0 ;
6. READ: b, GO ,
   a, GO ,
   r ;

EXAMPLE: Find the best fit curve and correlation coefficient for the following data:

x	0	1	2	3	4	5
y	.25	1.1	5	22.5	101	452

© Wang Laboratories, Inc., 1970

PROGRAM TITLE	NUMBER
LEAST SQUARE FIT - EXPONENTIAL	1003-2-ST3
	PAGE

1. Key PRIME, LOAD PROGRAM, VERIFY PROGRAM: Display should read 2003 ;

2. Depress f(x) , PRINTER ON ;

3. Key 00 ;

4. Key 0 GO, . 2 5 GO ;
   1 GO, 1 . 1 GO ;
   2 GO, 5 GO ;
   3 GO, 2 2 . 5 GO ;
   4 GO, 1 0 1 GO ;
   5 GO, 4 5 2 GO ;

5. Key SEARCH 0 ;

6. READ:

0.00000000	X
.25000000	Y
1.00000000	X
1.10000000	Y
2.00000000	X
5.00000000	Y
3.00000000	X
22.50000000	Y
4.00000000	X
101.0000000	Y
5.00000000	X
452.0000000	Y
1.50181117	B
.24798195	A
.99999715	C

1. Key PRIME, LOAD PROGRAM, VERIFY PROGRAM: Display should read 1995 ;

2. Depress f(x);

3. Key 00 ;

4. Key 0 GO, . 2 5 GO;
   1 GO, 1 . 1 GO ;
   2 GO, 5 GO ;
   3 GO, 2 2 . 5 GO ;
   4 GO, 1 0 1 GO ;
   5 GO, 4 5 2 GO ;

5. Key SEARCH 0 ;

6. READ: 1.501811174 GO ,
   .2479819510 GO,
   .9999971565;

© Wang Laboratories, Inc., 1970

OPTION 1: If you wish to find the y corresponding to a particular x on the basis of calculated coefficients, a and b,

Key x_i, 01,

READ: y_i;

EXAMPLE: Suppose you wish to find the y corresponding to x=1.5 on the basis of the calculated a and b in the example.

Key 1 . 5 , 01;

READ: 2.359187896

1.50000000 X
2.35918789 Y

OPTION 2: If you make a mistake in keying in a (x_i, y_i) number and have already put it into storage with the GO command, immediately key the wrong (x_i, y_i) according to:

Key x_i, 02,

y_i, GO ;

This will subtract the (x_i, y_i) numbers from the appropriate summations and decrease count by one. If you have a printer, the wrong (x_i, y_i) value will be reprinted with both x_i and y_i labeled "E" for "Error". Now proceed as in step 4 , starting with the correct (x_i, y_i) number, until all the data is keyed in.

EXAMPLE: Suppose you key in (2,4) instead of (2,5)

Key 2 , 02,

4 , GO;

Now proceed as in step 4, starting with point(2,5) and continue with the rest of the data points.

NOTE: You must correct the complete (x_i, y_i) data point. You cannot correct an individual x_i or y_i. If you key in x_i wrong, key in y_i and then make the correction on (x_i, y_i).

© Wang Laboratories, Inc., 1970

520/600 SERIES PROGRAM DESCRIPTION

TITLE	NO.
LEAST SQUARE FIT - EXPONENTIAL (General)	1004-2-ST3
	EQUIPMENT: 520-2/600-2

REGISTERS	MARKS	DATE
00 — 09, 14, 15	0000, 1000 1002, 1100	March 16, 1971
		PROGRAMMER: James J. Gibson

BLOCK	VERIFY NO. – PRINT	NO. OF STEPS – PRINT	VERIFY NO. – DISPLAY	NO. OF STEPS – DISPLAY
5	2038	152	2030	152

PROGRAM DESCRIPTION

This program calculates coefficients fitting data points to $y = ab^x$; it also calculates the correlation coefficient r.

$$y = ab^x$$

$$\text{Log}_e y = \text{Log}_e a + x \text{ LOG}_e b$$

$$y' = a' + b'x$$

$$b = \exp b' = \exp \left[\frac{n \Sigma (x_i \text{ Log}_e y_i) - (\Sigma x_i)(\Sigma \text{ Log}_e y_i)}{n \Sigma x_i^2 - (\Sigma x_i)^2} \right]$$

$$a = \exp \left[\frac{1}{n} \left\{ (\Sigma \text{ Log}_e y_i) - b' \Sigma x_i \right\} \right]$$

$$r = \frac{n \Sigma (x_i \text{ Log}_e y_i) - (\Sigma x_i)(\Sigma \text{ Log}_e y_i)}{\sqrt{\left\{ n \Sigma x_i^2 - (\Sigma x_i)^2 \right\} \left\{ n \Sigma (\text{Log}_e y_i)^2 - (\Sigma \text{ Log}_e y_i)^2 \right\}}}$$

© Wang Laboratories, Inc., 1972

Printed in U.S.A.

OPERATING PROCEDURE

PRINTER

1. Key PRIME, LOAD PROGRAM, VERIFY PROGRAM: Display should read 2038;
2. Depress f(x), PRINTER ON;
3. Key 00 ;
4. Key x_i, GO,
   y_i, GO;
   x_i labeled by "X"
   y_i labeled by "Y"
   Repeat step 4 for all (x_i, y_i) data;
5. Key SEARCH 0;
6. READ: b labeled by "B",
   a labeled by "A",
   r labeled by "C";

DISPLAY

1. Key PRIME, LOAD PROGRAM, VERIFY PROGRAM: Display should read 2030;
2. Depress f(x) ;
3. Key 00 ;
4. Key x_i, GO ,
   y_i, GO ;
   Repeat step 4 for all (x_i, y_i) data;
5. Key SEARCH 0 ;
6. READ: b GO,
   a GO ,
   r ;

EXAMPLE: Find the best fit curve and correlation coefficient for the following data:

x	0	1	2	3	4	5	6
y	.5	1	2	4	8	16	32

PRINTER

1. Key PRIME, LOAD PROGRAM, VERIFY PROGRAM: Display should read 2038 ;
2. Depress f(x), PRINTER ON;
3. Key 00;

DISPLAY

1. Key PRIME, LOAD PROGRAM, VERIFY PROGRAM: Display should read 2030;
2. Depress f(x) ;
3. Key 00;

© Wang Laboratories, Inc., 1970

PROGRAM TITLE	NUMBER
LEAST SQUARE FIT - EXPONENTIAL(General)	1004-2-ST3
	PAGE

4. Key 0 GO, .5 GO;
   1 GO, 1 GO;
   2 GO, 2 GO;
   3 GO, 4 GO;
   4 GO, 8 GO;
   5 GO, 16 GO;
   6 GO, 32 GO;

5. Key SEARCH 0;

6. READ:

0.00000000	X
.50000000	Y
1.00000000	X
1.00000000	Y
2.00000000	X
2.00000000	Y
3.00000000	X
4.00000000	Y
4.00000000	X
8.00000000	Y
5.00000000	X
16.00000000	Y
6.00000000	X
32.00000000	Y
1.99999999	B
.50000000	A
1.00000000	C

4. Key 0 GO, .5 GO;
   1 GO, 1 GO;
   2 GO, 2 GO;
   3 GO, 4 GO;
   4 GO, 8 GO;
   5 GO, 16 GO;
   6 GO, 32 GO;

5. Key SEARCH 0;

6. READ: 1.99999999 GO,
   .50000000 GO,
   1.00000000;

OPTION 1: If you wish to find the y corresponding to a particular x on the basis of calculated coefficients a and b,

Key x_i, 01,
READ y_i;

© Wang Laboratories, Inc., 1970

EXAMPLE: Suppose you wish to find the y corresponding to x = 4.5 on the basis of the calculated a and b in the example.

Key 4.5, 01;
READ 11.31370849

4.50000000 X
11.31370849 Y

OPTION 2: If you make a mistake in keying in an (x_i, y_i) number and have already put it into storage with the GO command, immediately key the wrong (x_i, y_i) according to:

Key x_i, 02,
y_i, GO;

This will subtract the (x_i, y_i) numbers from the appropriate summations and decrease count by one. If you have a printer, the wrong (x_i, y_i) value will be reprinted with both x_i and y_i labeled "E" for "ERROR". Now proceed as in step 4, starting with the correct (x_i, y_i) number, until all the data is keyed in.

EXAMPLE: Suppose you key in (3,3) instead of (3,4).

Key 3, 02,
3, GO;

Now proceed as in step 4, starting with point (3,4) and continue with the rest of the data points.

Note: You must correct the complete (x_i, y_i) data point. You cannot correct an individual x_i or y_i. If you key an x_i wrong, key in y_i and then make the correction on (x_i, y_i).

© Wang Laboratories, Inc., 1970

520/600 SERIES PROGRAM DESCRIPTION

TITLE	NO.
LEAST SQUARES FIT - HYPERBOLIC	1005-2-ST3
	EQUIPMENT: 520-2/600-2
REGISTERS: 00 - 07, 14, 15	MARKS: 0000, 1000 - 1002, 1100
	DATE: March 17, 1971
	PROGRAMMER: James J. Gibson

BLOCK	VERIFY NO. – PRINT	NO. OF STEPS – PRINT	VERIFY NO. – DISPLAY	NO. OF STEPS – DISPLAY
6	1799	137	1794	137

PROGRAM DESCRIPTION:

This program calculates the coefficients fitting data points to $\frac{y^2}{a^2} - \frac{x^2}{b^2} = 1$

It is necessary to transform the above equation to $y^2 = a' x^2 + b'$

where $a' = \frac{a^2}{b^2}$ and $b'a = a^2$

Now, applying the least squares method to find a' and b', it becomes necessary to solve the following two simultaneous equations:

$$a' \Sigma x_i^2 + b'n = \Sigma y_i^2$$

$$a' \Sigma x_i^4 + b' \Sigma x_i^2 = \Sigma x_i^2 y_i^2$$

then $a = \sqrt{b'}$

and $b = \sqrt{\frac{b'}{a'}}$

© Wang Laboratories, Inc., 1972

Printed in U.S.A.

PROGRAM TITLE	NUMBER
LEAST SQUARE FIT - HYPERBOLIC	1005-2-ST3
	PAGE

OPERATING PROCEDURE

PRINTER

1. Key PRIME, LOAD PROGRAM VERIFY PROGRAM: Display should read 1799;
2. Depress f(x), PRINTER ON;
3. Key 00;
4. Key x_i, GO,
   y_i, GO;
   x_i labeled by "X"
   y_i labeled by "Y"
   Repeat step 4 for all (x_i, y_i)
5. Key SEARCH 0;
6. READ: a labeled "A",
   b labeled "B";

DISPLAY

1. Key PRIME, LOAD PROGRAM, VERIFY PROGRAM: Display should read 1794;
2. Depress f(x);
3. Key 00;
4. Key x_i, GO,
   y_i, GO;
   Repeat step 4 for all (x_i, y_i)
5. Key SEARCH 0;
6. READ: a GO,
   b;

EXAMPLE: Find the best fit curve for the following data:

x	1	2	3	4	5
y	2.04	2.15	2.33	2.56	2.83

1. Key PRIME, LOAD PROGRAM, VERIFY PROGRAM: Display should read 1799;
2. Depress f(x), PRINTER ON;
3. Key 00;
4. Key 1 GO, 2 . 0 4 GO;
   2 GO, 2 . 1 5 GO;
   3 GO, 2 . 3 3 GO;
   4 GO, 2 . 5 6 GO;
   5 GO, 2 . 8 3 GO;

1. Key PRIME, LOAD PROGRAM, VERIFY PROGRAM: Display should read 1794;
2. Depress f(x);
3. Key 00;
4. Key 1 GO, 2 . 0 4 GO;
   2 GO, 2 . 1 5 GO;
   3 GO, 2 . 3 3 GO;
   4 GO, 2 . 5 6 GO;
   5 GO, 2 . 8 3 GO;

© Wang Laboratories, Inc., 197

5. Key SEARCH 0 ;

6. READ:

1.00000000	X
2.04000000	Y
2.00000000	X
2.15000000	Y
3.00000000	X
2.33000000	Y
4.00000000	X
2.56000000	Y
5.00000000	X
2.83000000	Y
1.99714575	A
4.98365762	B

5. Key SEARCH 0 ;

6. READ: 1.997145757 GO ,
4.983657628 ;

OPTION 1: If you wish to find the y corresponding to a particular x on the basis of calculated coefficients,

Key x_i, 01,
READ: y_i;

EXAMPLE: Suppose you wish to find the y corresponding to x = 3.75 on the basis of the calculated coefficients in the example:

Key 3 . 7 5, 01 ;
READ: 2.499382346

3.75000000	X
2.49938234	Y

© Wang Laboratories, Inc., 1970

OPTION 2: If you make a mistake in keying in an (x_i, y_i) number and have already put it into storage with the GO command, immediately key the wrong (x_i, y_i) according to:

Key x_i, 02,
y_i, GO;

This will subtract the (x_i, y_i) numbers from the appropriate summations and decrease count by one. If you have a printer, the wrong (x_i, y_i) value will be reprinted with both x_i and y_i labeled "E" for "error". Now proceed as in step 4, starting with the correct (x_i, y_i) number, until all the data is keyed in.

EXAMPLE: Suppose you key in (2,2) instead of (2,2.15).

Key 2, 02,
2, GO;

Now proceed as in step 4, starting with point (2,2.15) and continue with the rest of the data points.

NOTE: You must correct the complete (x_i, y_i) point. You cannot correct an individual x_i or y_i. If you key an x_i wrong, key y_i and then make the correction on (x_i, y_i).

© Wang Laboratories, Inc., 197

520/600 SERIES PROGRAM DESCRIPTION

TITLE	NO.
t-STATISTICS, TESTING POPULATION MEAN $\mu = \mu_o$	1006-2-ST2
	EQUIPMENT: 520-2/600-2
REGISTERS: 00 - 04, 14, 15	MARKS: 0000, 1000, 1100
	DATE: March 15, 1971
	PROGRAMMER: James J. Gibson

BLOCK	VERIFY NO. – PRINT	NO. OF STEPS – PRINT	VERIFY NO. – DISPLAY	NO. OF STEPS – DISPLAY
7	888	74	866	74

PROGRAM DESCRIPTION:

This program calculates t testing population mean $\mu = \mu_o$

$$t = \frac{(\bar{x} - \mu_o)\sqrt{n}}{s}$$

where $\bar{x} = \frac{1}{n} \Sigma x_i$

and $s = \sqrt{\frac{1}{n-1} \Sigma (x_i - \bar{x})^2}$

This can be rewritten as follows:

$$t = \frac{(\Sigma x_i - n\mu_o)\sqrt{n-1}}{\sqrt{n\Sigma x_i^2 - (\Sigma x_i)^2}}$$

n = number of data points

n - 1 degrees of freedom

© Wang Laboratories, Inc., 1972

Printed in U.S.A.

PROGRAM TITLE

t-STATISTICS, TESTING POPULATION MEAN $\mu = \mu_o$

NUMBER 1006-2-ST2

PAGE

OPERATING PROCEDURE

PRINTER	DISPLAY
1. Key PRIME, LOAD PROGRAM VERIFY PROGRAM: Display should read 888;	1. Key PRIME, LOAD PROGRAM, VERIFY PROGRAM: Display should read 866;
2. Depress f(x), PRINTER ON;	2. Depress f(x);
3. Key 00;	3. Key 00;
4. Key μ_o, GO; μ_o labeled by "M"	4. Key μ_o, GO;
5. Key x_i, GO; x_i labeled by "X" Repeat step 5 for all x_i	5. Key x_i, GO; Repeat step 5 for all x_i
6. Key SEARCH 0;	6. Key SEARCH 0;
7. READ: t labeled by "I"	7. READ: t

EXAMPLE: Calculate t-STATISTIC to test $\mu_o = 55$ for the following data: 59.2, 68.3, 57.8, 56.5, 63.7, 57.3.

1. Key PRIME, LOAD PROGRAM, VERIFY PROGRAM: Display should read 888;	1. Key PRIME, LOAD PROGRAM, VERIFY PROGRAM: Display should read 866;
2. Depress f(x), PRINTER ON;	2. Depress f(x);
3. Key 00;	3. Key 00;
4. Key 5 5 GO;	4. Key 5 5 GO;
5. Key 5 9 . 2 GO, 6 8 . 3 GO, 5 7 . 8 GO, 5 6 . 5 GO, 6 3 . 7 GO, 5 7 . 3 GO;	5. Key 5 9 . 2 GO, 6 8 . 3 GO, 5 7 . 8 GO, 5 6 . 5 GO, 6 3 . 7 GO, 5 7 . 3 GO;

© Wang Laboratories, Inc., 19

6. Key SEARCH 0 ;

7. READ:

55.0000	M
59.20000000	X
68.30000000	X
57.80000000	X
56.50000000	X
63.70000000	X
57.30000000	X
2.90422465	I

6. Key SEARCH 0 ;

7. READ: 2.904224650

OPTION: If you make a mistake in keying in an x_i number and have already put it into storage with the GO command, immediately key in the wrong x_i number according to:

Key x_i, 02 ;

This will subtract the x_i number from the appropriate summations and decrease count by one. If you have a printer, the x_i number will be reprinted and labeled "E" for "error". Now proceed as in step 5 with the correct number until all x_i are keyed in.

EXAMPLE: Suppose you key 68.3 instead of 68.5

Key 6 8 . 3, 02 ;

Now proceed as in step 5, keying in the correct number, 68.5, and continue with the rest of the data.

© Wang Laboratories, Inc., 1970

520/600 SERIES PROGRAM DESCRIPTION

TITLE	NO.
t-STATISTICS, TESTING CORRELATION COEFFICIENT $\rho = 0$	1007-2-ST2
	EQUIPMENT: 520-2/600-2
REGISTERS: 00 - 06, 14, 15	MARKS: 0000, 1000, 1100
	DATE: March 16, 1971
	PROGRAMMER: James J. Gibson

BLOCK	VERIFY NO. – PRINT	NO. OF STEPS – PRINT	VERIFY NO. – DISPLAY	NO. OF STEPS – DISPLAY
8	1534	119	1517	119

PROGRAM DESCRIPTION:

This program will test the hypothesis that x and y are independent, i.e. to test $\rho = 0$

$$t = \frac{r\sqrt{n-2}}{\sqrt{1-r^2}} \qquad (n \geq 3) \text{ with } n-2 \text{ degrees of freedom}$$

Where $$r = \frac{n\Sigma x_i y_i - (\Sigma x_i)(\Sigma y_i)}{\sqrt{\left\{ n\Sigma x_i^2 - (\Sigma x_i)^2 \right\} \cdot \left\{ n\Sigma y_i^2 - (\Sigma y_i)^2 \right\}}}$$

© Wang Laboratories, Inc., 19

Printed in

PROGRAM TITLE	NUMBER
t-STATISTICS, TESTING CORRELATION COEFFICIENT $\rho = 0$	1007-2-ST2
	PAGE

OPERATING PROCEDURE

PRINTER

1. Key PRIME, LOAD PROGRAM, VERIFY PROGRAM: Display should read 1534
2. Depress f(x) , PRINTER ON ;
3. Key 00 ;
4. Key x_i, GO ,

   y_i, GO ;

   x_i Labeled by "X"

   y_i Labeled by "Y"

   Repeat step 4 for all (x_i, y_i) data
5. Key SEARCH 0 ;
6. READ: t Labeled by "I"

DISPLAY

1. Key PRIME, LOAD PROGRAM, VERIFY PROGRAM: Display should read 1517
2. Depress f(x);
3. Key 00;
4. Key x_i, GO ,

   y_i, GO ;

   Repeat step 4 for all (x_i, y_i) data.
5. Key SEARCH 0 ;
6. READ: t

EXAMPLE: Calculate t-STATISTIC to test $\rho = 0$ for the following data:

x	5	4	3	2	1	0
y	6	4	4	3	1	1

© Wang Laboratories, Inc., 1970

PROGRAM TITLE

t-STATISTICS, TESTING CORRELATION COEFFICIENT $\rho = 0$

NUMBER 1007-2-ST2

PAGE

1. Key PRIME, LOAD PROGRAM, VERIFY PROGRAM: Display should read 1534

2. Depress f(x), PRINTER ON;

3. Key 00 ;

4. Key 5 GO, 6 GO ;
   4 GO, 4 GO ;
   3 GO, 4 GO ;
   2 GO, 3 GO ;
   1 GO, 1 GO ;
   0 GO, 1 GO ;

5. Key SEARCH 0 ;

6. READ:

```
5.00000000   X
6.00000000   Y

4.00000000   X
4.00000000   Y

3.00000000   X
4.00000000   Y

2.00000000   X
3.00000000   Y

1.00000000   X
1.00000000   Y

0.00000000   X
1.00000000   Y


7.24568837   I
```

1. Key PRIME, LOAD PROGRAM, VERIFY PROGRAM: Display should read 1517

2. Depress f(x);

3. Key 00 ;

4. Key 5 GO, 6 GO ;
   4 GO, 4 GO ;
   3 GO, 4 GO ;
   2 GO, 3 GO ;
   1 GO, 1 GO ;
   0 GO, 1 GO ;

5. Key SEARCH 0;

6. READ: 7.245688371

© Wang Laboratories, I...

OPTION: If you make a mistake in keying in an (x_i, y_i) number and have already put it in storage with the GO command, immediately key in the wrong (x_i, y_i) according to:

Key x_i, 02 ,
y_i, GO ;

This will subtract the (x_i, y_i) number from the appropriate summations and decrease count by one. If you have a printer, the wrong (x_i, y_i) value will be reprinted, with both x_i and y_i labeled "E" for "Error". Now proceed as in step 4, with the correct (x_i, y_i) number, until all the data is keyed in.

EXAMPLE: Suppose you key in (3, 3) instead of (3, 4)

Key 3 , 02 ,
3, GO ;

Now proceed in step 4 starting with (3, 4) and continue with the rest of the data points.

NOTE: You must correct the complete (x_i, y_i) point. You cannot correct an individual x_i or y_i . If you key x_i wrong, key y_i, and then make the correction on (x_i, y_i).

© Wang Laboratories, Inc., 1970

520/600 SERIES PROGRAM DESCRIPTION

TITLE	NO.
t-STATISTICS, TESTING LINEAR REGRESSION	1008-2-ST2
	EQUIPMENT: 520-2/600-2

REGISTERS	MARKS	DATE
00-09, 14, 15	0000, 1000, 1100	March 16, 1971
		PROGRAMMER: James J. Gibson

BLOCK	VERIFY NO. – PRINT	NO. OF STEPS – PRINT	VERIFY NO. – DISPLAY	NO. OF STEPS – DISPLAY
9	1882	140	1862	140

PROGRAM DESCRIPTION:

This program will test the hypothesis that $\beta = \beta_1$ in $Y = \alpha + \beta x$

$$t = \frac{\hat{\beta}_1 - \beta_1}{s} \sqrt{\frac{n \Sigma x_i^2 - (\Sigma x_i)^2}{n}}, \text{ with } n - 2 \text{ degrees of freedom}$$

$$\text{where } \hat{\beta}_1 = \frac{n \Sigma x_i y_i - (\Sigma x_i)(\Sigma y_i)}{n \Sigma x_i^2 - (\Sigma x_i)^2}$$

$$s^2 = \frac{1}{n-2} \left[\Sigma y_i^2 - \frac{1}{n} (\Sigma y_i)^2 - \frac{\hat{\beta}_1}{n} \left\{ n \Sigma x_i y_i - (\Sigma x_i)(\Sigma y_i) \right\} \right]$$

© Wang Laboratories, Inc., 1972

Printed in U.S.

PROGRAM TITLE	NUMBER
t-STATISTICS, TESTING LINEAR REGRESSION	1008-2-ST2
	PAGE

OPERATING PROCEDURE

PRINTER

1. Key PRIME, LOAD PROGRAM, VERIFY PROGRAM: Display should read 1882;
2. Depress f(x), PRINTER ON ;
3. Key 00 ;
4. Key β_1, GO ;

   β_1 labeled by "B"
5. Key x_i, GO,

   y_i, GO;

   x_i labeled by "X"

   y_i labeled by "Y"

   Repeat step 5 for all (x_i, y_i) data
6. Key SEARCH 0 ;
7. READ: t labeled by "I";

DISPLAY

1. Key PRIME, LOAD PROGRAM, VERIFY PROGRAM: Display should read 1862;
2. Depress f(x) ;
3. Key 00 ;
4. Key β_1, GO;
5. Key x_i, GO,

   y_i, GO ;

   Repeat step 5 for all (x_i, y_i) data
6. Key SEARCH 0 ;
7. READ: t ;

EXAMPLE: Calculate t-STATISTIC to test $\beta = 0 = \beta_1$ for the following data:

x	2	3	5	7	9
y	1	3	4	7	10

PRINTER

1. Key PRIME, LOAD PROGRAM, VERIFY PROGRAM: Display should read 1882;
2. Depress f(x), PRINTER ON ;
3. Key 00 ;
4. Key 0 GO ;

DISPLAY

1. Key PRIME, LOAD PROGRAM, VERIFY PROGRAM: Display should read 1862;
2. Depress f(x) ;
3. Key 00 ;
4. Key 0 GO;

© Wang Laboratories, Inc., 1970

5. Key 2 GO, 1 GO;
   3 GO, 3 GO;
   5 GO, 4 GO;
   7 GO, 7 GO;
   9 GO, 1 0 GO;

6. Key SEARCH 0 ;

7. READ:

0.00000000	B
2.00000000	X
1.00000000	Y
3.00000000	X
3.00000000	Y
5.00000000	X
4.00000000	Y
7.00000000	X
7.00000000	Y
9.00000000	X
10.00000000	Y
10.95445114	I

5. Key 2 GO , 1 GO ;
   3 GO , 3 GO ;
   5 GO , 4 GO ;
   7 GO , 7 GO ;
   9 GO , 1 0 GO;

6. Key SEARCH 0 ;

7. READ: 10.95445114

OPTION: If you make a mistake keying in an (x_i, y_i) number and have already put it into storage with the GO command, immediately key in the wrong (x_i, y_i) set according to:

Key x_i, 02 ,
y_i, GO;

This will subtract the (x_i, y_i) number from the appropriate summations and decrease count by one. If you have a printer, the wrong (x_i, y_i) value will be reprinted with both x_i and y_i labeled "E" for "error". Now proceed as in

© Wang Laboratories, Inc., 197

step 5, with the correct (x_i, y_i) number, until all the data is keyed in.

EXAMPLE: Suppose you key in (5,5) instead of (5,4)

Key 5 02 ,
5 GO ;

Now proceed as in step 5 by keying in the correct number (5,4) and continue until all the data is keyed in.

NOTE: You must correct the complete (x_i, y_i) point. You cannot correct an individual x_i or y_i. If you have keyed in an x_i wrong, key in y_i and then make the correction on (x_i, y_i).

© Wang Laboratories, Inc., 1970

520/600 SERIES PROGRAM DESCRIPTION

TITLE	NO.
t-STATISTICS FOR SIGNIFICANCE DIFFERENCE IN MEAN (Paired)	1009-2-ST2
	EQUIPMENT: 520-2/600-2
REGISTERS: 00-02, 14, 15 / MARKS: 0000, 1000, 1100	DATE: March 10, 1971
	PROGRAMMER: James J. Gibson

BLOCK	VERIFY NO. – PRINT	NO. OF STEPS – PRINT	VERIFY NO. – DISPLAY	NO. OF STEPS – DISPLAY
10	1019	82	1002	82

PROGRAM DESCRIPTION

This program calculates t for significance difference in mean for paired data.

$$t = \frac{\frac{|\Sigma d|}{n}\sqrt{n-1}}{\sqrt{\frac{\Sigma d^2}{n} - \left(\frac{\Sigma d}{n}\right)^2}}$$, with n - 1 degrees of freedom

d = difference between each pair

n = total number of pairs

© Wang Laboratories, Inc., 1972

Printed in U.S.

PROGRAM TITLE	NUMBER
t-STATISTICS FOR SIGNIFICANCE DIFFERENCE IN MEAN (Paired)	1009-2-ST2
	PAGE

OPERATING PROCEDURE

PRINTER

1. Key PRIME, LOAD PROGRAM, VERIFY PROGRAM: Display should read 1019;
2. Depress f(x), PRINTER ON;
3. Key 00 ;
4. Key x_i,GO ,
   y_i,GO ;

   x_i labeled by "X"

   y_i labeled by "Y"

   Repeat step 4 for all (x_i, y_i) data
5. Key SEARCH 0 ;
6. READ: t labeled "I"

DISPLAY

1. Key PRIME, LOAD PROGRAM, VERIFY PROGRAM: Display should read 1002 ;
2. Depress f(x) ;
3. Key 00 ;
4. Key x_i, GO ,
   y_i, GO ;

   Repeat step 4 for all (x_i, y_i) data
5. Key SEARCH 0 ;
6. READ: t

EXAMPLE: Calculate t-STATISTIC for the following data:

x	2	4	3	5	3
y	3	4	2	1	5

PRINTER

1. Key PRIME, LOAD PROGRAM, VERIFY PROGRAM: Display should read 1019
2. Depress f(x), PRINTER ON ;
3. Key 00 ;
4. Key 2 GO,3 GO ;
   4 GO,4 GO ;
   3 GO,2 GO ;
   5 GO,1 GO ;
   3 GO,5 GO ;

DISPLAY

1. Key PRIME, LOAD PROGRAM, VERIFY PROGRAM: Display should read 1002
2. Depress f(x) ;
3. Key 00 ;
4. Key 2 GO, 3 GO ;
   4 GO, 4 GO ;
   3 GO, 2 GO ;
   5 GO, 1 GO ;
   3 GO, 5 GO ;

© Wang Laboratories, Inc., 1970

5. Key SEARCH 0 ;

6. READ:

2.00000000	X
3.00000000	Y
4.00000000	X
4.00000000	Y
3.00000000	X
2.00000000	Y
5.00000000	X
1.00000000	Y
3.00000000	X
5.00000000	Y
.38851434	I

5. Key SEARCH 0 ;

6. READ: .3885143449

OPTION: If you make a mistake in keying in an (x_i, y_i) number and have already put it into storage with the GO command, immediately key in the wrong (x_i, y_i) according to:

Key x_i, 02 ,
y_i, GO ;

This will subtract the (x_i, y_i) number from the appropriate summations and decrease the count by one. If you have a printer, the wrong (x_i, y_i) value will be reprinted with both x_i and y_i labeled "E" for "error". Now proceed as in step 4, starting with the correct number, until all the data is keyed in.

EXAMPLE: Suppose you key in (5, 3) instead of (5, 1)

Key 5, 02 ,
3 GO ;

© Wang Laboratories, Inc., 1970

Now proceed as in step 4 with the point (5,1) and continue with the rest of the data points.

NOTE: You must correct the complete (x_i, y_i) data point. You cannot correct an individual x_i or y_i. If you key in x_i wrong, key y_i, and then make the correction on (x_i, y_i).

© Wang Laboratories, Inc., 1970

520/600 SERIES PROGRAM DESCRIPTION

TITLE	NO.
t-STATISTICS FOR SIGNIFICANCE DIFFERENCE IN MEAN (Unpaired)	1010-2-ST2
	EQUIPMENT: 520-2/600-2
REGISTERS: 00-06, 14, 15	MARKS: 0000, 1000-1003, 1100, 1101
	DATE: March 16, 1971
	PROGRAMMER: James J. Gibson

BLOCK	VERIFY NO. – PRINT	NO. OF STEPS – PRINT	VERIFY NO. – DISPLAY	NO. OF STEPS – DISPLAY
11	1525	123	1511	123

PROGRAM DESCRIPTION:

This program calculates t for significance difference in mean for unpaired data.

$$t = \frac{\left| \frac{\Sigma x_2}{n_2} - \frac{\Sigma x_1}{n_1} \right|}{\sqrt{\left[\Sigma x_1^2 - \frac{(\Sigma x_1)^2}{n_1} + \Sigma x_2^2 - \frac{(\Sigma x_2)^2}{n_2} \right] \left[\frac{n_1 + n_2}{n_1 n_2} \right]}{n_1 + n_2 - 2}}$$

with $n_1 + n_2 - 2$ degrees of freedom

© Wang Laboratories, Inc., 1972

Printed in U.S.A.

PROGRAM TITLE	NUMBER
t-STATISTICS FOR SIGNIFICANCE DIFFERENCE IN MEAN (unpaired)	1010-2-ST2
	PAGE

OPERATING PROCEDURE

PRINTER

1. Key PRIME, LOAD PROGRAM, VERIFY PROGRAM: Display should read 1525;
2. Depress f(x), PRINTER ON ;
3. Key 00;
4. Key x_{1i}, GO ,

   x_{1i} labeled by "X"

   Repeat step 4 for all x_{1i}
5. Key 01;
6. Key x_{2i}, GO;

   x_{2i} labeled by "Y"

   Repeat step 6 for all x_{2i}
7. Key SEARCH 0 ;
8. READ: t labeled by "I"

DISPLAY

1. Key PRIME, LOAD PROGRAM, VERIFY PROGRAM: Display should read 1511;
2. Depress f(x) ;
3. Key 00 ;
4. Key x_{1i}, GO ,

   Repeat step 4 for all x_{1i}
5. Key 01 ;
6. Key x_{2i}, GO;

   Repeat step 6 for all x_{2i}
7. Key SEARCH 0 ;
8. READ: t

EXAMPLE: Calculate t-STATISTIC for the following data:

x_1	3	4	3	5	2			
x_2	4	3	5	6	4	3	2	5

PRINTER

1. Key PRIME, LOAD PROGRAM, VERIFY PROGRAM: Display should read 1525;
2. Depress f(x), PRINTER ON;
3. Key 00 ;

DISPLAY

1. Key PRIME, LOAD PROGRAM, VERIFY PROGRAM: Display should read 1511 ;
2. Depress f(x) ;
3. Key 00 ;

© Wang Laboratories, Inc., 1970

4. Key 3 GO, 4 GO;
   3 GO, 5 GO;
   2 GO;

5. Key 01;

6. Key 4 GO, 3 GO;
   5 GO, 6 GO;
   4 GO, 3 GO;
   2 GO, 5 GO;

7. Key SEARCH 0;

8. READ:

3.00000000	X
4.00000000	X
3.00000000	X
5.00000000	X
2.00000000	X
4.00000000	Y
3.00000000	Y
5.00000000	Y
6.00000000	Y
4.00000000	Y
3.00000000	Y
2.00000000	Y
5.00000000	Y
.84166969	I

4. Key 3 GO, 4 GO;
   3 GO, 5 GO;
   2 GO;

5. Key 01;

6. Key 4 GO, 3 GO;
   5 GO, 6 GO;
   4 GO, 3 GO;
   2 GO, 5 GO;

7. Key SEARCH 0;

8. READ: .8416696924

OPTION: a) If you make a mistake in keying in an x_1 value and have already put it into storage with the GO command, immediately key the wrong x_1 according to:

Key x_1, 02;

This will subtract the x_1 number from the appropriate summations and decrease count by one. If you have a printer, the wrong x_1 value will be reprinted and labeled "E" for "error". Now proceed as in step 4, starting with the correct x_1 until all x_1 are keyed in.

© Wang Laboratories, Inc., 1970

EXAMPLE: Suppose you key 6 instead of 5

Key 6 02 ;

Now proceed as in step 4 starting with 5 and continuing with the rest of the data.

b) If you make a mistake in keying in an x_2 value and have already put it into storage with the GO command, immediately key the wrong x_2 according to:

Key x_2, 03 ;

This will subtract the x_2 number from the appropriate summations and decrease count by one. Now proceed as in step 6 starting with the correct x_2, until all x_2 are keyed in.

EXAMPLE: Suppose you key 7 instead of 6.

Key 7, 03 ;

Now proceed as in step 6 starting with 6 and continue with the rest of the data.

© Wang Laboratories, Inc., 1970

520/600 SERIES PROGRAM DESCRIPTION

TITLE	NO.
χ^2-STATISTICS, TESTING POPULATION VARIANCE $\sigma^2 = \sigma_o^2$	1011-2-ST2
	EQUIPMENT: 520-2/600-2
REGISTERS: 00-04, 15	MARKS: 0000, 1000, 1002, 1100
	DATE: March 8, 1971
	PROGRAMMER: James J. Gibson

BLOCK	VERIFY NO. – PRINT	NO. OF STEPS – PRINT	VERIFY NO. – DISPLAY	NO. OF STEPS – DISPLAY
12	651	59	658	59

PROGRAM DESCRIPTION:

This program calculates χ^2 for testing population variance $\sigma^2 = \sigma_o^2$

$$\chi^2 = \frac{1}{n\sigma_o^2} \left[n \Sigma x_i^2 - (\Sigma x_i)^2 \right]$$

with n - 1 degrees of freedom

OPERATING PROCEDURE

PRINTER

1. Key PRIME, LOAD PROGRAM, VERIFY PROGRAM: Display should read 651;
2. Depress f(x), PRINTER ON;
3. Key σ_o^2;

   σ_o^2 labeled by "Z"
4. Key 00;
5. Key x_i GO

   x_i labeled by "D"

   Repeat step 5 for all x_i;

DISPLAY

1. Key PRIME, LOAD PROGRAM, VERIFY PROGRAM: Display should read 658;
2. Depress f(x);
3. Key σ_o^2;
4. Key 00;
5. Key x_i GO;

   Repeat step 5 for all x_i;

© Wang Laboratories, Inc., 1972

Printed in U.S.A.

PROGRAM TITLE	NUMBER
χ^2-STATISTICS, TESTING POPULATION VARIANCE $\sigma^2 = \sigma_o^2$	1011-2-ST2
	PAGE

6. Key SEARCH 0 ;

7. READ: χ^2 labeled by "X"

6. Key SEARCH 0 ;

7. READ: χ^2

EXAMPLE: Calculate χ^2-STATISTIC to test $\sigma^2 = \sigma_o^2 = 4$ for $x_i = 6, 4, -1$.

1. Key PRIME, LOAD PROGRAM, VERIFY PROGRAM: Display should read 651;

2. Depress f(x), PRINTER ON ;

3. Key 4 ;

4. Key 00 ;

5. Key 6 GO,
   4 GO,
   1 CH SIGN GO ;

6. Key SEARCH 0 ;

7. READ:

```
     4.0000          Z

     6.0000          D
     4.0000          D
    -1.0000          D

  6.50000000         X
```

1. Key PRIME, LOAD PROGRAM, VERIFY PROGRAM: Display should read 658;

2. Depress f(x) ;

3. Key 4 ;

4. Key 00 ;

5. Key 6 GO ,
   4 GO ,
   1 CH SIGN GO ;

6. Key SEARCH 0 ;

7. READ: 6.50000000

OPTION: If you make a mistake in keying in an x_i value and have already put it into storage with the GO command, immediately key in the wrong x_i according to:

Key x_i, 02 ;

This will subtract the x_i number from the appropriate summation and decrease the count by one. If you have a printer, the wrong x_i value will be reprinted and

© Wang Laboratories, Inc., 1970

labeled "E" for "error". Now proceed as in step 5, keying in the correct x_i, until all the data is keyed in.

EXAMPLE: Suppose you key in +1 instead of -1, key 1, 02;

Now proceed as in step 5 starting with -1 and continue with the rest of the data.

© Wang Laboratories, Inc. 1972

520/600 SERIES PROGRAM DESCRIPTION

TITLE	NO.
χ^2-STATISTICS FOR OBSERVED FREQUENCIES AND EXPECTED FREQUENCIES	1012-2-ST2
	EQUIPMENT: 520-2/600-2

REGISTERS	MARKS	DATE	PROGRAMMER
00, 01, 05, 15	0000, 1000, 1002, 1101	March 12, 1971	James J. Gibson

BLOCK	VERIFY NO. – PRINT	NO. OF STEPS – PRINT	VERIFY NO. – DISPLAY	NO. OF STEPS – DISPLAY
13	531	46	524	46

PROGRAM DESCRIPTION:

$$\chi^2 = \frac{\Sigma (0_i - E_i)^2}{E_i}$$

where 0_i = observed frequency

E_i = expected frequency

i = number of occurances

OPERATING PROCEDURE

PRINTER

1. Key PRIME, LOAD PROGRAM, VERIFY PROGRAM: Display should read 531;
2. Depress f(x), PRINTER ON;
3. Key E_i, 00;

   E_i labeled by "E"
4. Key 0_i, GO;

DISPLAY

1. Key PRIME, LOAD PROGRAM, VERIFY PROGRAM: Display should read 524;
2. Depress f(x);
3. Key E_i, 00;
4. Key 0_i, GO;

© Wang Laboratories, Inc., 1972

Printed in U.S.A.

PROGRAM TITLE

χ^2-STATISTICS FOR OBSERVED FREQUENCIES AND EXPECTED FREQUENCIES

NUMBER 1012-2-ST2

PAGE

0_i labeled by "F"

Repeat step 5 for all 0_i

5. Key SEARCH 0 ;

6. READ: χ^2 labeled by "X"

Repeat step 5 for all 0_i.

5. Key SEARCH 0 ;

6. READ: χ^2

EXAMPLE: Calculate χ^2-STATISTIC for $E_i = 10$, and $0_i = 14, 9, 7$

1. Key PRIME, LOAD PROGRAM, VERIFY PROGRAM: Display should read 531 ;

2. Depress f(x), PRINTER ON;

3. Key 1 0 00;

4. Key 1 4 GO,
   9 GO,
   7 GO;

5. Key SEARCH 0;

6. READ:

```
10.00000      E

14.00000      F
 9.00000      F
 7.00000      F

2.60000000    X
```

1. Key PRIME, LOAD PROGRAM, VERIFY PROGRAM: Display should read 524 ;

2. Depress f(x) ;

3. Key 1 0 00;

4. Key 1 4 GO,
   9 GO,
   7 GO;

5. Key SEARCH 0;

6. READ: 2.60000000

OPTION: If you make a mistake in keying in an 0_i value and have already put it into storage with the GO command, immediately key the wrong 0_i according to:

Key 0_i, 02 ;

This will subtract the 0_i number from the appropriate summations and decrease

© Wang Laboratories, Inc., 197

count by one. If you have a printer, the wrong 0_i value will be reprinted and labeled "I". Now proceed as in step 5, starting with the correct 0_i, until all the data is keyed in.

EXAMPLE: Suppose you key in 8 instead of 9.

Key 8, 02;

Now proceed as in step 5, keying in 9 and continue with the rest of the data.

© Wang Laboratories, Inc., 1970

TITLE	NO.
POISSON DISTRIBUTION	1013-2-ST2
	EQUIPMENT: 520-2/600-2
REGISTERS: 00, 01, 04, 05, 06, 14, 15 — MARKS: 1000, 1001	DATE: March 10, 1971
	PROGRAMMER: James J. Gibson

BLOCK	VERIFY NO. – PRINT	NO. OF STEPS – PRINT	VERIFY NO. – DISPLAY	NO. OF STEPS – DISPLAY
14	719	56	688	56

PROGRAM DESCRIPTION:

$$P(k,\lambda) = e^{-\lambda}\,\frac{\lambda^{k}}{k!} \qquad k = 0,\ 1,\ 2,\ \ldots$$

The program calculates $P(k,\lambda)$ and

$$\sum_{k=0}^{k} P(k,\lambda) \quad \text{for given } \lambda \text{ and } k$$

OPERATING PROCEDURE

PRINTER

1. Key PRIME, LOAD PROGRAM, VERIFY PROGRAM: Display should read 719;
2. Depress f(x), PRINTER ON;
3. Key k; 00;

   k labeled by "K"
4. Key λ GO;

   λ labeled by "L"

DISPLAY

1. Key PRIME, LOAD PROGRAM, VERIFY PROGRAM: Display should read 688;
2. Depress f(x);
3. Key k; 00;
4. Key λ GO;

© Wang Laboratories, Inc., 197

Printed in U.

5. READ: $P(k,\lambda)$ labeled by "F"

$\sum_{0}^{k} P(k,\lambda)$ labeled by "I"

EXAMPLE: Calculate $P(k,\lambda)$ and $\sum_{0}^{k} P(k,\lambda)$

For $k = 3$ and $\lambda = 2$.

1. Key PRIME, LOAD PROGRAM, VERIFY PROGRAM: Display should read 719;
2. Depress f(x), PRINTER ON;
3. Key 3, 00;
4. Key 2 GO;
5. READ:

3.	K
2.00	L
.18044704	F
.857123460	I

5. READ: $P(k,\lambda)$, GO

$\sum_{0}^{k} P(k,\lambda)$

1. Key PRIME, LOAD PROGRAM, VERIFY PROGRAM: Display should read 688;
2. Depress f(x);
3. Key 3, 00;
4. Key 2 GO;
5. READ: .1804470443, GO
   .8571234604

© Wang Laboratories, Inc. 1972

520/600 SERIES PROGRAM DESCRIPTION

TITLE	NO.
MEAN, VARIANCE, STANDARD DEVIATION (Ungrouped Data)	1014-2-ST1
	EQUIPMENT: 520-2/600-2
REGISTERS: 00-04, 14, 15 — MARKS: 0002, 1000, 1001	DATE: December 8, 1970
	PROGRAMMER: E. Thibeault

BLOCK	VERIFY NO. – PRINT	NO. OF STEPS – PRINT	VERIFY NO. – DISPLAY	NO. OF STEPS – DISPLAY
15	734	60	704	60

PROGRAM DESCRIPTION:

This program computes the arithmetic mean $\bar{x}$, variance σ^2, and standard deviation σ for ungrouped data.

Formulas used:

$$\bar{x} = \frac{\Sigma x_i}{n}$$

$$\sigma^2 = \frac{\Sigma x_i^2 - n(\bar{x})^2}{n-1}$$

$$\sigma = \sqrt{\sigma^2}$$

where x_i = any of the data values being used ($x_1, x_2, x_3, \ldots x_n$).

n = number of values

$\bar{x}$ = arithmetic mean of these values

σ^2 = variance (square of standard deviation)

σ = standard deviation from the mean. (68.27% of all values should fall within ± 1 deviation from the mean).

© Wang Laboratories, Inc., 1972

Printed in U.S.A.

PROGRAM TITLE	NUMBER
MEAN, VARIANCE, STANDARD DEVIATION (UNGROUPED DATA)	1014-2-ST1
	PAGE

OPERATING PROCEDURE

1. Key PRIME, LOAD PROGRAM, VERIFY PROGRAM; Display should read 734;
2. Depress f(x), PRINTER ON
3. Key 00;
4. Key x_i, GO;
   x_i labeled by "X"

   Repeat step 4 for all x_i
5. Key 01;
6. READ: n count labeled by "C"
   $\bar{x}$ labeled by "M"
   σ^2 labeled by "Y"
   σ labeled by "D"

1. Key PRIME, LOAD PROGRAM, VERIFY PROGRAM; Display should read 704;
2. Depress f(x)
3. Key 00;
4. Key x_i, GO;

   Repeat step 4 for all x_i
5. Key 01;
6. READ: n count, GO
   $\bar{x}$, GO
   σ^2, GO
   σ

EXAMPLE: Calculate the mean, variance and standard deviation from the following ungrouped data: $x_i = 2, 3, 4, 5$.

1. Key PRIME, LOAD PROGRAM, VERIFY PROGRAM: Display should read 734;
2. Depress f(x), PRINTER ON
3. Key 00;
4. Key 2, GO,
   3, GO,
   4, GO,
   5, GO;
5. Key 01;

1. Key PRIME, LOAD PROGRAM, VERIFY PROGRAM: Display should read 704;
2. Depress f(x)
3. Key 00;
4. Key 2, GO,
   3, GO,
   4, GO,
   5, GO;
5. Key 01;

© Wang Laboratories, Inc., 1970

PROGRAM TITLE

MEAN, VARIANCE, STANDARD DEVIATION (UNGROUPED DATA)

NUMBER 1014-2-ST1

PAGE

6. READ:

```
2.000000000      X
3.000000000      X
4.000000000      X
5.000000000      X

4.000000000      C
3.500000000      M
1.666666666      Y
1.290994448      D
```

6. READ: 4.000000000, GO
3.500000000, GO
1.666666666, GO
1.290994448

© Wang Laboratories, Inc.

520/600 SERIES PROGRAM DESCRIPTION

TITLE	NO.
MEAN, VARIANCE, STANDARD DEVIATION (Grouped Data)	1015-2-ST1
	EQUIPMENT: 520-2/600-2

REGISTERS	MARKS	DATE	PROGRAMMER
00-04, 14, 15	0002, 1000, 1001	December 8, 1970	E. Thibeault

BLOCK	VERIFY NO. – PRINT	NO. OF STEPS – PRINT	VERIFY NO. – DISPLAY	NO. OF STEPS – DISPLAY
16	702	58	668	58

PROGRAM DESCRIPTION

This program computes the mean $\bar{x}$, variance σ^2, and standard deviation σ from grouped data.

Formulas used:

$$\bar{x} = \frac{\Sigma(f_i x_i)}{\Sigma f_i}$$

$$\sigma^2 = \frac{\Sigma f_i x_i^2 - \bar{x}^2 (\Sigma f_i)}{\Sigma f_i - 1}$$

$$\sigma = \sqrt{\sigma^2}$$

where f_1 = frequency (the number of times a given value of x_i appears)

x_i = any of the data values being used

$\bar{x}$ = the mean of these values

σ^2 = variance (square of the standard deviation)

σ = standard deviation from the mean (68.27% of all values should fall within ± 1 deviation from the mean)

© Wang Laboratories, Inc., 1972

Printed in U.S.A.

PROGRAM TITLE

MEAN, VARIANCE, STANDARD DEVIATION (GROUPED DATA)

NUMBER 1015-2-ST1

PAGE

OPERATING PROCEDURE

PRINTER

1. Key PRIME, LOAD PROGRAM, VERIFY PROGRAM: Display should read 702;
2. Depress f(x), PRINTER ON;
3. Key 00;
4. Key f_i, GO,
   x_i, GO;
   f_i labeled by "F"
   x_i labeled by "X"
5. Key 01;
6. READ: $\bar{x}$ labeled by "M"
   σ^2 labeled by "Y"
   σ labeled by "D"

DISPLAY

1. Key PRIME, LOAD PROGRAM, VERIFY PROGRAM: Display should read 668;
2. Depress f(x);
3. Key 00;
4. Key f_i, GO,
   x_i, GO;
   Repeat step 4 for all sets of f_i and x_i.
5. Key 01;
6. READ: $\bar{x}$, GO
   σ^2, GO
   σ

EXAMPLE: Calculate the mean, variance and standard deviation from the following grouped data:

f	1	3	6
x	4	8	12

1. Key PRIME, LOAD PROGRAM, VERIFY PROGRAM: Display should read 702;
2. Depress f(x), PRINTER ON;
3. Key 00;
4. Key 1 GO, 4 GO,
   3 GO, 8 GO,
   6 GO, 1 2 GO;
5. Key 01;

1. Key PRIME, LOAD PROGRAM, VERIFY PROGRAM: Display should read 668;
2. Depress f(x);
3. Key 00;
4. Key 1 GO, 4 GO,
   3 GO, 8 GO,
   6 GO, 1 2 GO;
5. Key 01;

© Wang Laboratories, Inc., 19

PROGRAM TITLE	NUMBER
MEAN, VARIANCE, STANDARD DEVIATION (GROUPED DATA)	1015-2-ST1
	PAGE

6. READ:

1.000000000	F
4.000000000	X
3.000000000	F
8.000000000	X
6.000000000	F
12.00000000	X
10.00000000	M
8.000000000	Y
2.828427124	D

6. READ: 10.00000000, GO
8.000000000, GO
2.828427124

© Wang Laboratories, Inc., 1970

520/600 SERIES PROGRAM DESCRIPTION

TITLE	NO.
RANDOM NUMBER GENERATOR	1016-2-ST6
	EQUIPMENT: 520-2/600-2
REGISTERS: 14, 15	MARKS: 0002 - 0005, 1000, 1001, 1014, 1015
	DATE: December 10, 1970
	PROGRAMMER: E. Thibeault

BLOCK	VERIFY NO. – PRINT	NO. OF STEPS – PRINT	VERIFY NO. – DISPLAY	NO. OF STEPS – DISPLAY
17	812	63	816	63

PROGRAM DESCRIPTION:

This program generates a series of 8 digit "Random" numbers between +1 and -1.

Any program used to generate "Random" numbers will actually generate numbers which are only pseudo-random. This is because such a program must repeat the same series of operations for each number that it computes, basing the new number on some manipulation of the preceding one. The randomness of the numbers generated by this program is based on the randomness of the low order digits of numbers obtained by using natural logarithms and fractional powers. We feel that most users will find these to be "Random" enough. However, a method is provided (as explained later in the OPTIONS) to obtain a somewhat more random series of numbers, should this be desired.

Since each number generated is some function of the previous number, you would always obtain exactly the same series of numbers if you started with the same number each time you used the program.

© Wang Laboratories, Inc., 197

Printed in U.S.

PROGRAM TITLE	NUMBER
RANDOM NUMBER GENERATOR	1016-2-ST6
	PAGE

OPERATING PROCEDURE

PRINTER

1. Key PRIME, LOAD PROGRAM, VERIFY PROGRAM: Display should read 812;
2. Depress f(x), PRINTER ON;
3. Key STARTING NUMBER;
4. Key 00;

   READ: a "Random" number between +1 and -1.
5. Key 15;

   The current number will be printed and labeled by "X" and a new one will appear in display.

   Repeat step 5 as many times as desired.

DISPLAY

1. Key PRIME, LOAD PROGRAM, VERIFY PROGRAM: Display should read 816;
2. Depress f(x);
3. Key STARTING NUMBER;
4. Key 00;

   READ: a "Random" number between +1 and -1.
5. Key 15;

   READ: New Random Number

   Repeat step 5 as many times as desired.

OPTIONS:

A. You may generate a series of "More Random" Random numbers by following steps 1 and 2, then modifying the program as follows:

   Key SET P.C., 0 0 2 2 ;
   Depress LEARN (Read: 0022 0055)
   Key 3;
   Depress RUN;

   Now continue with steps 3, 4 and 5 (Step 5 for "PRINTER" only). The program will now generate random numbers internally without stopping. Allow it to run for as long or short a time as desired. Whenever you wish you may stop display or print a random number as follows:

   a) For display, Key PRIME, RECALL RIGHT;
      Key 00 to resume;

   b) For Printer, Key PRIME, 15;
      (resumes automatically)

© Wang Laboratories, Inc. 1972

B. If you have a printer and wish to automatically print a series of random numbers, follow Step 1 and 2, then modify program as follows:

Key SET P.C., 0 0 2 2
Depress LEARN (Read: 0022 0005)
Key 4;
Depress RUN

Now return to steps 3-5. Random numbers will be printed out and labeled by "X" until you key PRIME.

© Wang Laboratories, Inc., 197

520/600 SERIES PROGRAM DESCRIPTION

TITLE	NO.
MATRIX ADDITION	1017-2-MA2
	EQUIPMENT: 520-2/600-2

REGISTERS	MARKS	DATE
WORK: 00-08 DATA: 09-n x m + 8	0000-0005, 1000	January, 1972
		PROGRAMMER: Pradeep Barthakur

BLOCK	VERIFY NO. – PRINT	NO. OF STEPS – PRINT	VERIFY NO. – DISPLAY	NO. OF STEPS – DISPLAY
18	930	106	823	96

PROGRAM DESCRIPTION:

For two given matrices A and B, this program will calculate their sum A + B = C, where A, B, and C are m x n matrices.

$$\text{Let } A = \begin{vmatrix} a_{11} & a_{12} & \cdots & a_{1n} \\ a_{21} & a_{22} & \cdots & a_{2n} \\ \cdot & & & \\ \cdot & & & \\ \cdot & & & \\ a_{m1} & a_{m2} & \cdots & a_{mn} \end{vmatrix} \quad \text{and } B = \begin{vmatrix} b_{11} & b_{12} & \cdots & b_{1n} \\ b_{21} & b_{22} & \cdots & b_{2n} \\ \cdot & \cdot & & \\ \cdot & \cdot & & \\ \cdot & \cdot & & \\ b_{m1} & b_{m2} & \cdots & b_{mn} \end{vmatrix}$$

$$\text{Then } A + B = C = \begin{vmatrix} c_{11} & c_{12} & \cdots & c_{1n} \\ c_{21} & c_{22} & \cdots & c_{2n} \\ \cdot & \cdot & & \\ \cdot & \cdot & & \\ \cdot & \cdot & & \\ c_{m1} & c_{m2} & \cdots & c_{mn} \end{vmatrix}$$

© Wang Laboratories, Inc., 1972

Printed in U.S.A.

PROGRAM TITLE	NUMBER
MATRIX ADDITION	1017-2-MA2
	PAGE

where $c_{ij} = a_{ij} + b_{ij}$.

The program requires that m x n $\leq$ { 33 on 520-2, 600-2; 97 on 520-6, 600-6; 225 on 520-14, 600-14

The display is used as an entry aid to indicate the subscript of the element being entered, thus, it will first read 1.01 indicating that the element appearing in location (1,1) should be entered, it will then read 1.02 etc. After having entered all the elements of the first row the display will read 2.01 etc.

OPERATING PROCEDURE

PRINTER

1. Load block number 18;
2. Key VERIFY PROGRAM, display should read 930;
3. Depress f(x), PRINTER ON;
4. Key m (number of rows) 00; m labeled by I
5. Key n (number of columns) GO; n labeled by J
6. Enter matrix A:

   Key a_{11} GO a_{12} GO ... a_{1n} GO
   a_{21} GO a_{22} GO ... a_{2n} GO
   .
   .
   .
   a_{m1} GO a_{m2} GO ... a_{mn} GO

   a_{ij} labeled by A

DISPLAY

1. Load block number 18;
2. Key VERIFY PROGRAM, display should read 823;
3. Depress f(x);
4. Key m (number of rows) 00;
5. Key n (number of columns) GO;
6. Enter matrix A :

   Key a_{11} GO a_{12} GO ... a_{1n} GO
   a_{21} GO a_{22} GO ... a_{2n} GO
   .
   .
   .
   a_{m1} GO a_{m2} GO ... a_{mn} GO

© Wang Laboratories, Inc., 1970

PROGRAM TITLE	NUMBER
MATRIX ADDITION	1017-2-MA2
	PAGE

7. Enter matrix B:

Key b_{11} GO b_{12} GO ... b_{1n} GO

b_{21} GO b_{22} GO ... b_{2n} GO

.
.
.

b_{m1} GO b_{m2} GO ... b_{mn} GO

b_{ij} labeled by B

READ: Matrix C
c_{ij} labeled by C

7. Enter matrix B:

Key b_{11} GO b_{12} GO... b_{1n} GO

b_{21} GO b_{22} GO... b_{2n} GO

.
.
.

b_{m1} GO b_{m2} GO... b_{mn} GO

READ: c_{11} GO
c_{12} GO
c_{mn}

The subscript of the elements of matrix c will be displayed for .5 seconds before the corresponding element.

EXAMPLE:

Given A = $\begin{vmatrix} 5 & 3 & -8 \\ 7 & 0 & 9 \end{vmatrix}$ and B = $\begin{vmatrix} 6 & 10 & 12 \\ 4 & -5 & 1 \end{vmatrix}$ find A + B

PRINTER

1. Load block number 18;
2. Key VERIFY PROGRAM: Display should read 930;
3. Depress f(x), PRINTER ON;
4. Key 2 00;
5. Key 3 GO;

DISPLAY

1. Load block number 18;
2. Key VERIFY PROGRAM: Display should read 823;
3. Depress f(x);
4. Key 2 00;
5. Key 3 GO;

© Wang Laboratories, Inc., 1970

6. Enter matrix A:

Key 5 GO 3 GO 8 CH SIGN GO
7 GO 0 GO 9 GO;

7. Enter matrix B:

Key 6 GO 1 0 GO 1 2 GO
4 GO 5 CH SIGN GO 1 GO;

READ:

```
          2.          I
          3.          J

       5.00000        A
       3.00000        A
      -8.00000        A

       7.00000        A
       0.00000        A
       9.00000        A

       6.00000        B
      10.00000        B
      12.00000        B

       4.00000        B
      -5.00000        B
       1.00000        B

      11.00000000     C
      13.00000000     C
      4.000000000     C

      11.00000000     C
      -5.000000000    C
      10.00000000     C
```

6. Enter matrix A:

Key 5 GO 3 GO 8 CH SIGN GO
7 GO 0 GO 9 GO;

7. Enter matrix B:

Key 6 GO 1 0 GO 1 2 GO
4 GO 5 CH SIGN GO 1 GO

READ:

$11.00000000 = c_{11}$ GO
$13.00000000 = c_{12}$ GO
$4.000000000 = c_{13}$ GO
$11.00000000 = c_{21}$ GO
$-5.000000000 = c_{22}$ GO
$10.00000000 = c_{23}$

Hence,
$$\begin{vmatrix} 5 & 3 & -8 \\ 7 & 0 & 9 \end{vmatrix} + \begin{vmatrix} 6 & 10 & 12 \\ 4 & -5 & 1 \end{vmatrix} = \begin{vmatrix} 11 & 13 & 4 \\ 11 & -5 & 10 \end{vmatrix}$$

© Wang Laboratories, Inc., 1970

520/600 SERIES PROGRAM DESCRIPTION

TITLE	NO.
MATRIX SUBTRACTION	1018-2-MA2
	EQUIPMENT: 520-2/600-2
REGISTERS: WORK: 00-08 DATA: 09-nxm+8	MARKS: 0000-0005, 1001
	DATE: January, 1972
	PROGRAMMER: Pradeep Barthakur

BLOCK	VERIFY NO. – PRINT	NO. OF STEPS – PRINT	VERIFY NO. – DISPLAY	NO. OF STEPS – DISPLAY
19	932	106	825	96

For two given matrices A and B, this program will calculate their difference A - B = C, where A, B, and C are m x n matrices.

$$\text{Let } A = \begin{vmatrix} a_{11} & a_{12} & \cdots & a_{1n} \\ a_{21} & a_{22} & \cdots & a_{2n} \\ \cdot & \cdot & & \\ \cdot & \cdot & & \\ \cdot & \cdot & & \\ a_{m1} & a_{m2} & \cdots & a_{mn} \end{vmatrix} \quad \text{and } B = \begin{vmatrix} b_{11} & b_{12} & \cdots & b_{1n} \\ b_{21} & b_{22} & \cdots & b_{2n} \\ \cdot & & & \\ \cdot & & & \\ \cdot & & & \\ b_{m1} & b_{m2} & \cdots & b_{mn} \end{vmatrix}$$

$$\text{Then } A - B = C = \begin{vmatrix} c_{11} & c_{12} & \cdots & c_{1n} \\ c_{21} & c_{22} & \cdots & c_{2n} \\ \cdot & & & \\ \cdot & & & \\ \cdot & & & \\ c_{m1} & c_{m2} & \cdots & c_{mn} \end{vmatrix}$$

where $c_{ij} = a_{ij} - b_{ij}$.

© Wang Laboratories, Inc., 1972

Printed in U.S.A.

The program requires that $m \times n \leq$ { 33 on 520-2/600-2; 97 on 520-6/600-6; 225 on 520-14/600-14

The display is used as an entry aid to indicate the subscript of the element being entered, thus it will first read 1.01 indicating that the element appearing in location (1,1) should be entered. It will then read 1.02 etc. After having entered all the elements of the first row the display will read 2.01 etc.

OPERATING PROCEDURE

PRINTER

1. Load block number 19;
2. Key VERIFY PROGRAM: Display should read 932;
3. Depress f(x), PRINTER ON;
4. Key m (number of rows) 01; m labeled by I
5. Key n (number of columns) GO; n labeled by J
6. Enter matrix A:

   Key a_{11} GO a_{12} GO ... a_{1n} GO
   a_{21} GO a_{22} GO ... a_{2n} GO
   .
   .
   .
   a_{m1} GO a_{m2} GO ... a_{mn} GO

   a_{ij} labeled by A

DISPLAY

1. Load block number 19;
2. Key VERIFY PROGRAM: Display should read 825;
3. Depress f(x);
4. Key m (number of rows) 01;
5. Key n (number of columns) GO;
6. Enter matrix A:

   Key a_{11} GO a_{12} GO ... a_{1n} GO
   a_{21} GO a_{22} GO ... a_{2n} GO
   .
   .
   .
   a_{m1} GO a_{m2} GO ... a_{mn} GO;

© Wang Laboratories, Inc., 19

7. Enter matrix B:

Key b_{11} GO b_{12} GO ... b_{1n} GO
b_{21} GO b_{22} GO ... b_{2n} GO
.
.
.
b_{m1} GO b_{m2} GO ... b_{mn} GO

b_{ij} labeled by B

READ: Matrix C
c_{ij} labeled by C

EXAMPLE:

Given A = $\begin{vmatrix} 3 & 5 \\ 1 & 7 \\ 2 & 9 \end{vmatrix}$ and B = $\begin{vmatrix} 6 & 7 \\ -8 & 0 \\ 9 & 3 \end{vmatrix}$ find A - B

PRINTER

1. Load block number 19;
2. Key VERIFY PROGRAM: Display should read 932;
3. Depress f(x), PRINTER ON;
4. Key 3 01;
5. Key 2 GO;
6. Enter matrix A:

Key 3 GO 5 GO
1 GO 7 GO
2 GO 9 GO;

7. Enter matrix B:

Key b_{11} GO b_{12} GO ... b_{1n} GO
b_{21} GO b_{22} GO ... b_{2n} GO
.
.
.
b_{m1} GO b_{m2} GO ... b_{mn} GO

READ: c_{11} GO
c_{12} GO
c_{mn}

The subscript of the elements of matrix C will be displayed for .5 seconds before the corresponding element.

DISPLAY

1. Load block number 19;
2. Key VERIFY PROGRAM: Display should read 825;
3. Depress f(x);
4. Key 3 01;
5. Key 2 GO;
6. Enter matrix A:

Key 3 GO 5 GO
1 GO 7 GO
2 GO 9 GO;

© Wang Laboratories, Inc., 1970

7. Enter matrix B:

Key 6 GO 7 GO
8 CH SIGN GO 0 GO
9 GO 3 GO;

READ:

3.	I
2.	J
3.00000	A
5.00000	A
1.00000	A
7.00000	A
2.00000	A
9.00000	A
6.00000	B
7.00000	B
-8.00000	B
0.00000	B
9.00000	B
3.00000	B
-3.000000000	C
-2.000000000	C
9.000000000	C
7.000000000	C
-7.000000000	C
6.000000000	C

Hence, $\begin{vmatrix} 3 & 5 \\ 1 & 7 \\ 2 & 9 \end{vmatrix} - \begin{vmatrix} 6 & 7 \\ -8 & 0 \\ 9 & 3 \end{vmatrix} = \begin{vmatrix} -3 & -2 \\ 9 & 7 \\ -7 & 6 \end{vmatrix}$

7. Enter matrix B:

Key 6 GO 7 GO
8 CH SIGN GO 0 GO
9 GO 3 GO;

READ: $-3.000000000 = c_{11}$ GO
$-2.000000000 = c_{12}$ GO
$9.000000000 = c_{21}$ GO
$7.000000000 = c_{22}$ GO
$-7.000000000 = c_{31}$ GO
$6.000000000 = c_{32}$

© Wang Laboratories, Inc., 1970

520/600 SERIES PROGRAM DESCRIPTION

TITLE	NO.
MATRIX MULTIPLICATION	1019-2-MA2
	EQUIPMENT: 520-2/600-2
REGISTERS: WORK: 00-12 DATA: 13-(m+n)p+12	MARKS: 0000-0007, 1002
	DATE: January, 1972
	PROGRAMMER: Pradeep Barthakur

BLOCK	VERIFY NO. – PRINT	NO. OF STEPS – PRINT	VERIFY NO. – DISPLAY	NO. OF STEPS – DISPLAY
20	1643	183	1437	169

PROGRAM DESCRIPTION

For a given m x p matrix A and a p x n matrix B, this program will calculate their product AB = C, where C is an m x n matrix.

Let

$$A = \begin{vmatrix} a_{11} & a_{12} & \cdots & a_{1p} \\ a_{21} & a_{22} & \cdots & a_{2p} \\ \cdot & & & \\ \cdot & & & \\ \cdot & & & \\ a_{m1} & a_{m2} & \cdots & a_{mp} \end{vmatrix} \quad \text{and } B = \begin{vmatrix} b_{11} & b_{12} & \cdots & b_{1n} \\ b_{21} & b_{22} & \cdots & b_{2n} \\ & & & \\ & & & \\ b_{p1} & b_{p2} & \cdots & b_{pn} \end{vmatrix}$$

Then the product

$$AB = C = \begin{vmatrix} c_{11} & c_{12} & \cdots & c_{1n} \\ c_{21} & c_{22} & \cdots & c_{2n} \\ \cdot & & & \\ \cdot & & & \\ \cdot & & & \\ c_{m1} & c_{m2} & \cdots & c_{mn} \end{vmatrix}$$

Where $c_{ij} = \sum_{k=1}^{p} a_{ik} b_{kj}$

© Wang Laboratories, Inc., 1972

Printed in U.S.A.

PROGRAM TITLE	NUMBER
MATRIX MULTIPLICATION	1019-2-MA2
	PAGE

The program requires that $(m \times n)p \leq$ { 21 on 520-2/600-2; 85 on 520-6/600-6; 213 on 520-14/600-14

OPERATING PROCEDURE

PRINTER

1. Load block number 20;
2. Key VERIFY PROGRAM: Display should read 1643;
3. Depress f(x), PRINTER ON;
4. Key m (number of rows of matrix A) 02;
   m labeled by I
5. Key p (number of columns of matrix A) GO;
   p labeled by K
6. Key n (number of columns of matrix B) GO;
   n labeled by J
7. Enter matrix A:

   Key a_{11} GO a_{12} GO ... a_{1p} GO
   a_{21} GO a_{22} GO ... a_{2p} GO
   .
   .
   .
   a_{m1} GO a_{m2} GO ... a_{mp} GO

   a_{ik} labeled by A

DISPLAY

1. Load block number 20;
2. Key VERIFY PROGRAM: Display should read 1437;
3. Depress f(x);
4. Key m (number of rows of matrix A) 02;
5. Key p (number of columns of matrix A) GO;
6. Key n (number of columns of matrix B) GO;
7. Enter matrix A:

   Key a_{11} GO a_{12} GO ... a_{1p} GO
   a_{21} GO a_{22} GO ... a_{2p} GO
   .
   .
   .
   a_{m1} GO a_{m2} GO ... a_{mp} GO

© Wang Laboratories, Inc., 1970

PROGRAM TITLE	NUMBER
MATRIX MULTIPLICATION	1019-2-MA2
	PAGE

8. Enter matrix B:

Key b_{11} GO b_{12} GO ... b_{1n} GO
b_{21} GO b_{22} GO ... b_{2n} GO
.
.
.
b_{p1} GO b_{p2} GO ... b_{pn} GO

b_{kj} labeled by B

READ: Matrix C
c_{ij} labeled by C

8. Enter matrix B:

Key b_{11} GO b_{12} GO ... b_{1n} GO
b_{21} GO b_{22} GO ... b_{2n} GO
.
.
.
b_{p1} GO b_{p2} GO ... b_{pn} GO

READ: c_{11} GO
c_{12} GO
.
.
c_{mn}

The subscript of the elements of matrix C will be displayed for .5 seconds before the corresponding element.

EXAMPLE:

Given:

$$A = \begin{vmatrix} 2 & -1 \\ 4 & 5 \\ -3 & 7 \end{vmatrix} \text{ and } B = \begin{vmatrix} 4 & -2 & 1 \\ 3 & 0 & 7 \end{vmatrix}$$ find AB.

PRINTER

1. Load block number 20;
2. Key VERIFY PROGRAM: Display should read 1643;
3. Depress f(x), PRINTER ON;
4. Key 3 02;
5. Key 2 GO;
6. Key 3 GO;

DISPLAY

1. Load block number 20;
2. Key VERIFY PROGRAM: Display should read 1437;
3. Depress f(x);
4. Key 3 02;
5. Key 2 GO;
6. Key 3 GO;

© Wang Laboratories, Inc., 1970

PROGRAM TITLE

MATRIX MULTIPLICATION

NUMBER 1019-2-MA2

PAGE

7. Enter matrix A:

Key 2 GO 1 CH SIGN GO
4 GO 5 GO
3 CH SIGN GO 7 GO;

8. Enter matrix B:

Key 4 GO 2 CH SIGN GO 1 GO
3 GO 0 GO 7 GO;

READ:

3.	I
2.	K
3.	J
2.000000	A
-1.000000	A
4.000000	A
5.000000	A
-3.000000	A
7.000000	A
4.000000	B
-2.000000	B
1.000000	B
3.000000	B
0.000000	B
7.000000	B
5.000000000	C
-4.000000000	C
-5.000000000	C
31.00000000	C
-8.000000000	C
39.00000000	C
9.000000000	C
6.000000000	C
46.00000000	C

7. Enter matrix A:

Key 2 GO 1 CH SIGN GO
4 GO 5 GO
3 CH SIGN GO 7 GO;

8. Enter matrix B:

Key 4 GO 2 CH SIGN GO 1 GO
3 GO 0 GO 7 GO;

READ:

5.000000000 = c_{11} GO
-4.000000000 = c_{12} GO
-5.000000000 = c_{13} GO
31.00000000 = c_{21} GO
-8.000000000 = c_{22} GO
39.00000000 = c_{23} GO
9.000000000 = c_{31} GO
6.000000000 = c_{32} GO
46.00000000 = c_{33}

© Wang Laboratories, Inc., 1970

Hence

$$\begin{vmatrix} 2 & -1 \\ 4 & 5 \\ -3 & 7 \end{vmatrix} \quad \begin{vmatrix} 4 & -2 & 1 \\ 3 & 0 & 7 \end{vmatrix} = \begin{vmatrix} 5 & -4 & -5 \\ 31 & -8 & 39 \\ 9 & 6 & 46 \end{vmatrix}$$

© Wang Laboratories, Inc., 1970

520/600 SERIES PROGRAM DESCRIPTION

TITLE	NO.
MATRIX INVERSION	1020-2-MA3
	EQUIPMENT: 520-2/600-2
REGISTERS	MARKS
WORK: 00-09 DATA: $10-n^2+8$	0000-0015, 0100, 1003
	DATE: January, 1972
	PROGRAMMER: Pradeep Barthakur

BLOCK	VERIFY NO. – PRINT	NO. OF STEPS – PRINT	VERIFY NO. – DISPLAY	NO. OF STEPS – DISPLAY
21	2941	298	2840	292

PROGRAM DESCRIPTION:

The inversion process requires n-passes for an n x n matrix. The program rearranges the elements after each pass, such that the following pass is identical to the preceding one. n-applications of the procedure, elimination and rearrangement yields the inverse of the original matrix.

The program requires that the element appearing in location (1,1) at the start of each pass not be zero. This condition is tested and if it exists the program will stop with the overflow indicator on. The user may elect to interchange a pair of rows (or columns) to avoid or overcome this problem. If he so chooses he must allow for the effects such interchanges may have on the system represented by the matrix. If the matrix is found to be singular, the program will stop with the overflow indicator on.

The program requires that $2 \geq n \geq \begin{cases} 2 \text{ on } 520\text{-}2/600\text{-}2 \\ 8 \text{ on } 520\text{-}6/600\text{-}6 \\ 14 \text{ on } 520\text{-}14/600\text{-}14 \end{cases}$

© Wang Laboratories, Inc., 1972

Printed in U.S.

PROGRAM TITLE	NUMBER
MATRIX INVERSION	1020-2-MA3
	Page of

OPERATING PROCEDURE

PRINTER

1. Load block number 21;
2. Key VERIFY PROGRAM: Display should read 2941;
3. Depress f(x), PRINTER ON;
4. Key n (order of matrix) 03;
   n labeled by I
5. Enter matrix A:

   Key a_{11} GO a_{12} GO... a_{1n} GO
   a_{21} GO a_{22} GO... a_{2n} GO
   .
   .
   .
   a_{n1} GO a_{n2} GO... a_{nn} GO;

   a_{ij} labeled by A

   READ: A^{-1}

   b_{ij} labeled by B

DISPLAY

1. Load block number 21;
2. Key VERIFY PROGRAM: Display should read 2840;
3. Depress f(x);
4. Key n (order of matrix) 03;
5. Enter matrix A:

   Key a_{11} GO a_{12} GO... a_{1n} GO
   a_{21} GO a_{22} GO... a_{2n} GO
   .
   .
   .
   a_{n1} GO a_{n2} GO... a_{nn} GO;

   READ: b_{11} GO
   b_{12} GO
   b_{nn}

   The subscript of the elements of A^{-1} will be displayed for .5 seconds before the corresponding element.

Where b_{11}, b_{12} ... b_{nn} are the elements of A^{-1}.

EXAMPLE: Find the inverse of the following matrix.

$$A = \begin{vmatrix} 1 & 2 & 0 & -1 \\ 3 & 7 & 4 & 2 \\ -2 & 0 & 3 & 1 \\ 0 & 1 & 3 & -2 \end{vmatrix}$$

© Wang Laboratories, Inc., 1971

PROGRAM TITLE	NUMBER
MATRIX INVERSION	1020-2-MA3
	PAGE

PRINTER

1. Load block number 21;

2. Key VERIFY PROGRAM: Display should read 2941;

3. Depress f(x), PRINTER ON;

4. Key 4 03;

5. Key 1 GO 2 GO 0 GO 1 CH SIGN GO
   3 GO 7 GO 4 GO 2 GO
   2 CH SIGN GO 0 GO 3 GO 1 GO
   0 GO 1 GO 3 GO 2 CH SIGN GO

READ:

```
          4.          I

    1.000000          A
    2.000000          A
    0.000000          A
   -1.000000          A

    3.000000          A
    7.000000          A
    4.000000          A
    2.000000          A

   -2.000000          A
    0.000000          A
    3.000000          A
    1.000000          A

    0.000000          A
    1.000000          A
    3.000000          A
   -2.000000          A
```

DISPLAY

1. Load block number 21;

2. Key VERIFY PROGRAM: Display should read 2840;

3. Depress f(x);

4. Key 4 03;

5. Key 1 GO 2 GO 0 GO 1 CH SIGN GO
   3 GO 7 GO 4 GO 2 GO
   2 CH SIGN GO 0 GO 3 GO 1 GO
   0 GO 1 GO 3 GO 2 CH SIGN GO

READ: $-.9285714285 = b_{11}$ GO

$.2142857143 = b_{12}$ GO

$-.6428571428 = b_{13}$ GO

$.3571428571 = b_{14}$ GO

$.7857142856 = b_{21}$ GO

$-.0428571428 = b_{22}$ GO

$.3285714285 = b_{23}$ GO

$-.2714285714 = b_{24}$ GO

$-.5000000000 = b_{31}$ GO

$.1000000000 = b_{32}$ GO

$-.0999999999 = b_{33}$ GO

$.2999999999 = b_{34}$ GO

$-.3571428571 = b_{41}$ GO

$.1285714285 = b_{42}$ GO

$.0142857142 = b_{43}$ GO

$-.1857142857 = b_{44}$

© Wang Laboratories, Inc. 1972

```
-9.285714285-01      B
 2.142857143-01      B
-6.428571428-01      B
 3.571428571-01      B

 7.857142856-01      B
-4.285714286-02      B
 3.285714285-01      B
-2.714285714-01      B

-5.000000000-01      B
 1.000000000-01      B
-9.999999999-02      B
 2.999999999-01      B

-3.571428571-01      B
 1.285714285-01      B
 1.428571428-02      B
-1.857142857-01      B
```

Hence

$$A^{-1} = \begin{vmatrix} -.9285714285 & .2142857143 & -.6428571428 & .3571428571 \\ .7857142856 & -.0428571428 & .3285714285 & -.2714285714 \\ -.5000000000 & .1000000000 & -.0999999999 & .2999999999 \\ -.3571428571 & .1285714285 & .0142857142 & -.1857142857 \end{vmatrix}$$

ACCURACY OF RESULT:

One measure of the accuracy of matrix inversion can be established by multiplying the original matrix (A) by its calculated inverse (A^{-1}) and noting how closely it approaches the theoretical result (i.e., the unit matrix). For our example:

$$(A)(A^{-1}) = \begin{vmatrix} 1.000000000 & .0000000002 & .0000000001 & .0000000001 \\ .0000000002 & 1.000000000 & .0000000001 & .0000000001 \\ .0000000002 & -.0000000001 & 1.000000000 & .0000000003 \\ .0000000000 & -.0000000004 & -.0000000005 & .9999999997 \end{vmatrix}$$

© Wang Laboratories, Inc., 1970

520/600 SERIES PROGRAM DESCRIPTION

TITLE	NO.
SOLUTION OF n-SIMULTANEOUS EQUATIONS	1021-2-MA3
	EQUIPMENT: 520-2/600-2

REGISTERS	MARKS	DATE
WORK: 00-08 DATA: 9-n(n+1)+8	0000-0013, 1004, 1100	January, 1972
		PROGRAMMER: Pradeep Barthakur

BLOCK	VERIFY NO. – PRINT	NO. OF STEPS – PRINT	VERIFY NO. – DISPLAY	NO. OF STEPS – DISPLAY
22	2682	289	2583	280

PROGRAM DESCRIPTION:

This program calculates the solutions for a system of n-simultaneous equations. The equations are represented as follows:

$$a_{11}x_1 + a_{12}x_2 + \ldots + a_{1n}x_n = b_1$$

$$a_{21}x_1 + a_{22}x_2 + \ldots + a_{2n}x_n = b_2$$

$$\vdots$$

$$a_{n1}x_1 + a_{n2}x_2 + \ldots + a_{nn}x_n = b_n$$

The program requires that $n \leq$ { 2 on 520-2/600-2; 8 on 520-6/600-6; 13 on 520-14/600-14 }

The display is used as an entry aid to indicate the subscript of the element being entered. Thus when the display reads 1.01, Key a_{11}, 1.02, Key a_{12}, 1.n, Key a_{1n}, 1, Key b_1. Similarly 2.01, Key a_{21}, etc. If the system of equations has no solution the program will stop with the program error light on.

© Wang Laboratories, Inc.

PROGRAM TITLE	NUMBER
SOLUTION OF n-SIMULTANEOUS EQUATIONS	1021-2-MA3
	PAGE

OPERATING PROCEDURE

PRINTER

1. Load block number 22;
2. Key VERIFY PROGRAM: Display should read 2682;
3. Depress f(x), PRINTER ON;
4. Key n , 04;
   n labeled by I
5. Key a_{11}GO, a_{12}GO, ... a_{1n}GO, b_1GO
   a_{21}GO, a_{22}GO, ... a_{2n}GO, b_2GO
   .
   .
   .
   a_{n1}GO, a_{n2}GO, ... a_{nn}GO, b_nGO;
   labeled by A
6. READ: x_n
   x_{n-1}
   .
   .
   .
   x_1
   x labeled by X

DISPLAY

1. Load block number 22;
2. Key VERIFY PROGRAM: Display should read 2583;
3. Depress f(x);
4. Key n , 04;
5. Key a_{11}GO, a_{12}GO, ... a_{1n}GO, b_1GO
   a_{21}GO, a_{22}GO, ... a_{2n}GO, b_2GO
   .
   .
   .
   a_{n1}GO, a_{n2}GO, ... a_{nn}GO, b_nGO;
6. READ: x_n, GO
   x_{n-1}, GO
   .
   .
   .
   x_1

EXAMPLE: Given four equations:

$$5x_1 + x_3 + 2x_4 = 8$$

$$2x_1 + x_2 + 3x_3 + x_4 = 0$$

$$x_2 + 3x_3 + 2x_4 = 3$$

$$x_1 + 4x_2 + x_3 + 3x_4 = 1$$

Solve for x_1, x_2, x_3 and x_4.

© Wang Laboratories, Inc. 1972

PROGRAM TITLE	NUMBER
SOLUTION OF n-SIMULTANEOUS EQUATIONS	1021-2-MA3
	PAGE

PRINTER

1. Load block number 22;

2. Key VERIFY PROGRAM: Display should read 2682;

3. Depress f(x), PRINTER ON;

4. Key 4, 04;

5. Key 5 GO, 0 GO, 1 GO, 2 GO, 8 GO
   2 GO, 1 GO, 3 GO, 1 GO, 0 GO
   0 GO, 1 GO, 3 GO, 2 GO, 3 GO
   1 GO, 4 GO, 1 GO, 3 GO, 1 GO;

6. READ:

Sample output is on following page.

DISPLAY

1. Load block number 22;

2. Key VERIFY PROGRAM: Display should read 2587;

3. Depress f(x);

4. Key 4, 04;

5. Key 5 GO, 0 GO, 1 GO, 2 GO, 8 GO
   2 GO, 1 GO, 3 GO, 1 GO, 0 GO
   0 GO, 1 GO, 3 GO, 2 GO, 3 GO
   1 GO, 4 GO, 1 GO, 3 GO, 1 GO;

6. READ:

$3.577777777 = x_4$ GO

$-.5999999996 = x_3$ GO

$-2.355555556 = x_2$ GO

$.2888888888 = x_1$

© Wang Laboratories, Inc., 19

```
          4.          I

    5.000000          A
    0.000000          A
    1.000000          A
    2.000000          A
    8.000000          A

    2.000000          A
    1.000000          A
    3.000000          A
    1.000000          A
    0.000000          A

    0.000000          A
    1.000000          A
    3.000000          A
    2.000000          A
    3.000000          A

    1.000000          A
    4.000000          A
    1.000000          A
    3.000000          A
    1.000000          A

 3.577777777+00       X
-5.999999996-01       X
-2.355555556+00       X
 2.888888888-01       X
```

© Wang Laboratories, Inc., 1970

520/600 SERIES PROGRAM DESCRIPTION

TITLE	NO.
FOURIER ANALYSIS	1022-2-MA2
	EQUIPMENT: 520-2/600-2
REGISTERS: WORK: 00-08; DATA: 09-U_k + 8	MARKS: 0000-0006, 1005
	DATE: January, 1972
	PROGRAMMER: Pradeep Barthakur

BLOCK	VERIFY NO. – PRINT	NO. OF STEPS – PRINT	VERIFY NO. – DISPLAY	NO. OF STEPS – DISPL
23	1311	145	1088	126

PROGRAM DESCRIPTION:

This is a general FOURIER ANALYSIS PROGRAM for the determination of "Fourier Coefficients" from empirical data. We assume that the data is derived in connection with a periodic (cyclic) phenomenon. Assume that the period (length 2π) is divided into n equal intervals, and that n correspondent observations, U_0, U_1, ... U_{n-1} are recorded. The program finds the coefficients a_0, a_1, a_2, ... a_r; b_1, b_2, ... b_r such that a_r and b_r are the amplitudes of the rth harmonic. That is to say:

$$P(x) = a_0 + a_1 \cos x + a_2 \cos 2x + \ldots + a_r \cos rx + b_1 \sin x + b_2 \sin 2x + \ldots + b_r \sin rx \quad (r \leq n/2)$$

is a polynomial which takes on the values U_k at the points $x = k\,2\pi/n$ and is periodic with period 2π.

The program requires that the number of points U_k be ≤
- 26 on 520-2/600-2
- 90 on 520-6/600-6
- 218 on 520-14/600-14

© Wang Laboratories, Inc.

PROGRAM TITLE	NUMBER
FOURIER ANALYSIS	1022-2-MA2
	PAGE

The program makes use of the following three formulae in arriving at the coefficients a_r and b_r:

$$a_0 = \frac{1}{n} \sum_{k=0}^{n-1} U_k$$

$$a_r = \frac{2}{n} \sum_{k=0}^{n-1} U_k \cos\left(kr \frac{2\pi}{n}\right)$$

$$b_r = \frac{2}{n} \sum_{k=0}^{n-1} U_k \sin\left(kr \frac{2\pi}{n}\right), \quad r \leq \frac{n}{2}$$

When $r = \frac{n}{2}$, the factor of a_r in front of the symbol Σ is $\frac{1}{n}$, not $\frac{2}{n}$.

OPERATING PROCEDURE

PRINTER

1. Load block number 23;
2. Key VERIFY PROGRAM: Display should read 1311;
3. Depress f(x), PRINTER ON, DEG⟶RAD;
4. Key 05;
5. Key U_0 GO,
   U_1 GO,
   .
   .
   .
   U_{n-1} GO;
   U_k labeled by X
6. Key SEARCH 1;

DISPLAY

1. Load block number 23;
2. Key VERIFY PROGRAM: Display should read 1088;
3. Depress f(x), DEG⟶RAD;
4. Key 05;
5. Key U_0 GO,
   U_1 GO,
   .
   .
   .
   U_{n-1} GO;
6. Key SEARCH 1;

© Wang Laboratories, Inc., 1970

PROGRAM TITLE	NUMBER
FOURIER ANALYSIS	1022-2-MA2
	PAGE

7. READ:
   - a_0 labeled by A
   - a_1 labeled by A
   - b_1 labeled by B
   - .
   - .
   - .
   - a_r labeled by A
   - b_r labeled by B
   - n/2 labeled by I
   - r labeled by K

7. READ:
   - a_0 GO,
   - a_1 GO,
   - b_1 GO,
   - .
   - .
   - .
   - a_r GO,
   - b_r GO,
   - n/2 GO,
   - r

EXAMPLE: Find a Fourier series to represent the following observations which depict twelve equidistant ordinates of a periodic curve:

U_0	U_1	U_2	U_3	U_4	U_5	U_6	U_7	U_8	U_9	U_{10}	U_{11}
2.714	3.042	2.134	1.273	0.788	0.495	0.370	0.540	0.191	-0.357	-0.437	0.767

PRINTER

1. Load block number 23;
2. Key VERIFY PROGRAM: Display should read 1311;
3. Depress f(x), PRINTER ON, DEG⟶RAD;
4. Key 05;
5. Key 2.714 GO
   3.042 GO
   2.134 GO
   1.273 GO
   .788 GO
   .495 GO
   .37 GO
   .54 GO

DISPLAY

1. Load block number 23;
2. Key VERIFY PROGRAM: Display should read 1088;
3. Depress f(x), DEG⟶RAD;
4. Key 05;
5. Key 2.714 GO
   3.042 GO
   2.134 GO
   1.273 GO
   .788 GO
   .495 GO
   .37 GO
   .54 GO

© Wang Laboratories, Inc., 1970

.191 GO
.357 CH SIGN GO
.437 CH SIGN GO
.767 GO;

6. Key SEARCH 1;

READ:

Sample output is on the following page.

.191 GO
.357 CH SIGN GO
.437 CH SIGN GO
.767 GO;

6. Key SEARCH 1;

READ:

.9600000000 = a_0 GO

.8508924116 = a_1 GO
.9147614132 = b_1 GO

.5419999999 = a_2 GO
.6197855139 = b_2 GO

.2709999999 = a_3 GO
.0999999999 = b_3 GO

.0399999999 = a_4 GO
.0499407983 = b_4 GO

.0501075882 = a_5 GO
.0002385868 = b_5 GO

.0000000000 = a_6 GO
9.003527559e -11 = b_6 GO

6.000000000 = n/2
6.000000000 = r

© Wang Laboratories, Inc., 1970

```
      2.714000          X
      3.042000          X
      2.134000          X
      1.273000          X
       .788000          X
       .495000          X
       .370000          X
       .540000          X
       .191000          X
      -.357000          X
      -.437000          X
       .767000          X

    .960000000          A

    .850892411          A
    .914761413          B

    .541999999          A
    .619785513          B

    .270999999          A
    .099999999          B

    .039999999          A
    .049940798          B

    .050107588          A
    .000238586          B

   0.000000000          A
    .000000000          B

      6.00000           I
      6.00000           K
```

© Wang Laboratories, Inc.

520/600 SERIES PROGRAM DESCRIPTION

TITLE	NO.
FORMULAE EVALUATION	1023-6-MA6
	EQUIPMENT: 520-2/600-6

REGISTERS	MARKS	DATE	PROGRAMMER
00, 04-31	0000-0007 1000-1008 1100-1106	January, 1972	

BLOCK	VERIFY NO. – PRINT	NO. OF STEPS – PRINT	VERIFY NO. – DISPLAY	NO. OF STEPS – DISPLAY
24	2554	242	2554	242

PROGRAM DESCRIPTION:

This program enables the evaluation of various formulae that consists of any or all of the four operations, addition, subtraction, multiplication, division and also powers of numbers.

This program is intended to save the user the usual work associated with evaluating a given formula, part by part, storing some of the intermediate values and later combining them to yield his answer. All that has to be done now is to key the formula almost exactly as written, i.e. $((ab + c)\ d^{(e(f+gh))}) \div (jkl - mn) =$ would be keyed as follows:

Clear ((a x b + c) x d power (e x (f + g x h))) ÷ (jkl - mn) =

where the following special function keys are used:

00	01	02	03	04	05	06	07	08
CLEAR	+	-	x	÷	POWER	(	)	=

Notes: The answer appears in the display after "=" has been keyed.

Brackets may be within brackets up to 4 deep.

If brackets are of 1 level, the display will read "1" when "(" is keyed and the contents of the brackets will be displayed when ")" is keyed. If there are 2 to 4 levels, the display will read "1" when the outside bracket is opened, "2" when the next bracket is opened, etc. and the contents of each bracket will be displayed as each is closed.

The "-" key is a subtract key, not a negative sign. Thus (-4) must be keyed in (4 CH SIGN) or (0 - 4)

© Wang Laboratories, Inc., 1972

Printed in U.S.A.

PROGRAM TITLE	NUMBER
FORMULAE EVALUATION	1023-6-MA6
	PAGE

Error light appears if brackets are not balanced when "=" has been keyed.

There is no limit to the extent of the formula to be evaluated.

A printer is not necessary for the execution of this program.

Reference: Special thanks to John Barrien of Electricity Trust of South Australia for the contribution of this program.

OPERATING PROCEDURE

1. Load block number 24;
2. Key VERIFY PROGRAM: Display should read 2554;
3. Depress f(x);
4. Key 00 (for "CLEAR"). This will set registers 4 through 31 to 0;
5. Key appropriate digits and special function keys which represent the given formula.

00	CLEAR
01	+
02	-
03	x
04	÷
05	POWER
06	(
07	)
08	=

6. Read evaluated formula.

© Wang Laboratories, Inc.

PROGRAM TITLE	NUMBER
FORMULAE EVALUATION	1023-6-MA6
	PAGE

EXAMPLE: Evaluate

$$\frac{(3 + 2 \times 6)^{(5 - 4 \div 9)} - (8 \times 5 + 3 \times 15 - 36)}{5 + 4 \times 6 - 7} - (3 \times 2 - 9 \times 3)$$

This may be written as:

(((3 + 2 x 6) power (5 - 4 ÷ 9) - (8 x 5 + 3 x 15 - 36)) ÷ (5 + 4 x 6 - 7) - (3 x 2 - 9 x 3) =

1. Load block number 24;

2. Key VERIFY PROGRAM: Display should read 2554;

3. Depress f(x);

4. Key 00;

5. Key 06 06 06 3 01 2 03 6 07 05
   06 5 02 4 04 9 07 02
   06 8 03 5 01 3 03 1 5 02 3 6 07 07 04
   06 5 01 4 03 6 02 7 07 07 02
   06 3 03 2 02 9 03 3 07
   08

6. READ: 10377.97678

© Wang Laboratories, Inc. 1972

520/600 SERIES PROGRAM DESCRIPTION

TITLE	NO.
$BASE_A \rightleftharpoons BASE_B$	1024-2-MA6
	EQUIPMENT: 520-2/600-2
REGISTERS: 00-05, 15	MARKS: 0000-0002, 1000, 1001, 1100, 1101
	DATE: February 25, 1971
	PROGRAMMER: E. Thibeault

BLOCK	VERIFY NO. – PRINT	NO. OF STEPS – PRINT	VERIFY NO. – DISPLAY	NO. OF STEPS – DISPLAY
25	959	91	91	959

PROGRAM DESCRIPTION:

This program will convert a number, x, in BASE A to BASE B and vice versa. Base range: $2 \leq$ BASE A, B ≤ 10.

The program does not require a printer.

OPERATING PROCEDURE

1. Key PRIME, LOAD PROGRAM, VERIFY PROGRAM: Display should read 959;

2. Depress f(x);

3. Store BASE A in LEFT register
   Store BASE B in RIGHT register;

4. a) If A ⟶ B: Key x, 00
   b) If A ⟵ B: Key x, 01
   READ: Converted x

EXAMPLE: Suppose you wish to convert the numbers 7 and 8 from base 10 to base 2.
Let A = 2, B = 10.

1. Key PRIME, LOAD PROGRAM, VERIFY PROGRAM: Display should read 959;

2. Depress f(x);

3. Key 2, STORE LEFT
   Key 1 0, STORE RIGHT

4. Since we wish B ⟶ A, Key 8, 01;

© Wang Laboratories, Inc., 197

Printed in U

READ: 1000.0000
Key 7, 01;
READ: 111.00000

Find the number, in base 10, equivalent to 111 in base 2.

Key 1 1 1, 00
READ: 7.0000000

© Wang Laboratories, Inc., 1970

520/600 SERIES PROGRAM DESCRIPTION

TITLE	NO.
SIMPSON'S RULE - f(x) KNOWN	1025-2-MA4
	EQUIPMENT: 520-2/600-2
REGISTERS: 00-04, 15	MARKS: 0001, 0002 1000, 1001
	DATE: March 1, 1971
	PROGRAMMER: J Patino/J. Gibson

BLOCK	VERIFY NO. – PRINT	NO. OF STEPS – PRINT	VERIFY NO. – DISPLAY	NO. OF STEPS – DISPLAY
26	891	80	882	80

PROGRAM DESCRIPTION:

This program calculates $\int_a^b f(x)\,dx$ for any f(x).

$$A = \int_a^b f(x)\,dx = \frac{\Delta x}{3}\left[f(a) + 4f(a+\Delta x) + 2f(a+2\Delta x) + 4f(a+3\Delta x) + \ldots + 4f(b-\Delta x) + f(b)\right]$$

A subroutine must be written to evaluate f(x); it should start with MARK 1001 beginning at step 0057.

i.e., 0057	MARK
0058	0001
	↑
	f(x)
	↓
	RETURN

Note: x must be recalled from Register 04
The value of f(x) must be in display when it exits from function subroutine.

© Wang Laboratories, Inc.

PROGRAM TITLE	NUMBER
SIMPSON'S RULE - f(x) known	1025-2-MA4
	PAGE

OPERATING PROCEDURE

PRINTER

1. Key PRIME, LOAD PROGRAM, VERIFY PROGRAM: Verify No. will vary depending on the subroutine keyed in. For our example, the display should read 891.
2. Depress f(x), PRINTER ON;
3. Key a , 00;
   a labeled by "A"
4. Key b GO
   b labeled by "B"
5. Key Δx GO;
   Δx labeled by "I"
6. READ: A labeled by "K"

DISPLAY

1. Key PRIME, LOAD PROGRAM, VERIFY PROGRAM: Verify No. will vary depending on the subroutine keyed in. For our example, the display should read 882.
2. Depress f(x);
3. Key a , 00;
4. Key b GO;
5. Key Δx GO;
6. READ: A

The example included is $f(x) = x^3 + 2x^2 + 3x + 4$.

Evaluate $\int_a^b (x^3 + 2x^2 + 3x + 4)\,dx$

1. Key PRIME, LOAD PROGRAM, VERIFY PROGRAM: Display should read 891
2. Depress f(x), PRINTER ON
3. Key 1, 00;
4. Key 2, GO;
5. Key . 0 5, GO;
6. READ:

```
1.0000      A
2.0000      B
 .0500      I

16.91666666 K
```

1. Key PRIME, LOAD PROGRAM, VERIFY PROGRAM: Display should read 882
2. Depress f(x);
3. Key 1, 00;
4. Key 2, GO;
5. Key . 0 5, GO;
6. READ: 16.91666666

© Wang Laboratories, Inc., 1970

520/600 SERIES PROGRAM DESCRIPTION

TITLE	NO.
SIMPSON'S RULE - f(x) UNKNOWN	1026-2-MA4
	EQUIPMENT: 520-2/600-2
REGISTERS: 00, 01, 02, 15 — MARKS: 0001, 1001	DATE: March 17, 1971
	PROGRAMMER: J. Patino/J. Gibson

BLOCK	VERIFY NO. – PRINT	NO. OF STEPS – PRINT	VERIFY NO. – DISPLAY	NO. OF STEPS – DISPLAY
27	734	69	759	69

PROGRAM DESCRIPTION:

This program approximates the integral of a function, f(x) when f(x) is unknown.

$$A = \frac{\Delta x}{3}\left[y_o + 4y_1 + 2y_2 + 4y_3 + 2y_4 + \ldots + 2y_{n-2} + 4y_{n-1} + y_n\right]$$

n must be an <u>even</u> number, and we assume an even spacing of Δx between successive values of y.

© Wang Laboratories, Inc., 1972

Printed in U.S.A.

PROGRAM TITLE	NUMBER
SIMPSON'S RULE - f(x) unknown	1026-2-MA4
	PAGE

OPERATING PROCEDURE

PRINTER

1. Key PRIME, LOAD PROGRAM, VERIFY PROGRAM: Display should read 734;
2. Depress f(x), PRINTER ON;
3. Key n, 00;
   n labeled by "D"
4. Key Δx labeled by "I"
   Δx labeled by "I"
5. Key y_i, GO
   y_i labeled by "Y"

   Repeat step 5 for all y_i
6. READ: A labeled by "A"

EXAMPLE: Find A for n = 10, Δx = .1

DISPLAY

1. Key PRIME, LOAD PROGRAM, VERIFY PROGRAM: Display should read 759;
2. Depress f(x);
3. Key n, 00;
4. Key Δx, GO
5. Key y_i, GO

   Repeat step 5 for all y_i
6. READ: A

y_i = 1, 1.331, 1.728, 2.197, 2.744,
3.375, 4.096, 4.913, 5.832,
6.859, 8.000.

1. Key PRIME, LOAD PROGRAM, VERIFY PROGRAM: Display should read 734
2. Depress f(x), PRINTER ON;
3. Key 1 0, 00;
4. Key . 1, GO;

1. Key PRIME, LOAD PROGRAM, VERIFY PROGRAM: Display should read 759
2. Depress f(x);
3. Key 1 0, 00;
4. Key . 1, GO;

© Wang Laboratories, Inc., 1970

PROGRAM TITLE	NUMBER
SIMPSON'S RULE - f(x) unknown	1026-2-MA4
	PAGE

5. Key 1 GO, 1.331, GO, 1.728, GO, 2.197 GO, 2.744 GO, 3.375 GO, 4.096 GO, 4.913 GO, 5.832 GO, 6.859 GO, 8 GO;

6. READ:

```
      10.          D
     .1000         I

    1.00000        Y
    1.33100        Y
    1.72800        Y
    2.19700        Y
    2.74400        Y
    3.37500        Y
    4.09600        Y
    4.91300        Y
    5.83200        Y
    6.85900        Y
    8.00000        Y

   3.74999999      A
```

5. Key 1 GO, 1.331 GO, 1.728 GO, 2.197 GO, 2.744 GO, 3.375 GO, 4.096 GO, 4.913 GO, 5.832 GO, 6.859 GO, 8 GO;

6. READ: 3.749999999

© Wang Laboratories, Inc.

520/600 SERIES PROGRAM DESCRIPTION

TITLE	NO.
HYPERBOLIC FUNCTIONS	1027-2-MA1
	EQUIPMENT: 520-2/600-2

REGISTERS	MARKS	DATE
00, 14, 15	1000 - 1005	March 25, 1971
		PROGRAMMER: James J. Gibson

BLOCK	VERIFY NO. – PRINT	NO. OF STEPS – PRINT	VERIFY NO. – DISPLAY	NO. OF STEPS – DISPLAY
28	1019	66	1019	66

PROGRAM DESCRIPTION:

This program calculates: sinh, cosh, tanh, $\sinh^{-1}$, $\cosh^{-1}$ and $\tanh^{-1}$.

$$\sinh x = \frac{1}{2}\left[e^{x} - e^{-x}\right]$$

$$\cosh x = \frac{1}{2}\left[e^{x} + e^{-x}\right]$$

$$\tanh x = \frac{e^{x} - e^{-x}}{e^{x} + e^{-x}}$$

$$\sinh^{-1} x = \text{Log}_e\left[x + \sqrt{x^2 + 1}\right]$$

$$\cosh^{-1} x = \text{Log}_e\left[x + \sqrt{x^2 - 1}\right] \qquad x \geq 1$$

$$\tanh^{-1} x = \frac{1}{2}\,\text{Log}_e\left[\frac{1 + x}{1 - x}\right] \qquad x < 1$$

Note: No printer is needed since this program is meant to be used as a subroutine for programs which need hyperbolic functions.

© Wang Laboratories, Inc., 1972

Printed in U.S.A.

PROGRAM TITLE	NUMBER
HYPERBOLIC FUNCTIONS	1027-2-MA1
	PAGE

OPERATING PROCEDURE

1. Key PRIME, LOAD PROGRAM, VERIFY PROGRAM: Display should read 1019

2. Depress f(x);

3. sinh x: Key x, 00;
   cosh x: Key x, 01;
   tanh x: Key x, 02;
   $\sinh^{-1}$x: Key x, 03;
   $\cosh^{-1}$x: Key x, 04;
   $\tanh^{-1}$ x: Key x, 05;

   For example,

sinh (2):	Key 2, 00;	READ: 3.626860407
cosh (3):	Key 3, 01;	READ: 10.16766199
tanh (5):	Key 5, 02;	READ: .9999092042
$\sinh^{-1}$(2.1293):	Key 2.1293, 03;	READ: 1.500008733
$\cosh^{-1}$(2.5775):	Key 2.5775, 04;	READ: 1.600014955
$\tanh^{-1}$(.99933):	Key .99933, 05;	READ: 4.000522484

© Wang Laboratories, Inc.

520/600 SERIES PROGRAM DESCRIPTION

TITLE	NO.
VECTOR ANALYSIS AND OPERATIONS	1028-2-MA3
	EQUIPMENT: 520-2/600-2
REGISTERS: 00-07, 14, 15 / MARKS: 1000, 1007, 1103	DATE: March 29, 1971
	PROGRAMMER: John Patino

BLOCK	VERIFY NO. – PRINT	NO. OF STEPS – PRINT	VERIFY NO. – DISPLAY	NO. OF STEPS – DISPLAY
29	3509	250	3561	250

PROGRAM DESCRIPTION:

The following is a list of the content and purpose of each subroutine contained in this program:

f(x)	TITLE	PURPOSE
00	STORE VECTORS	Stores vectors $\vec{A}$ and $\vec{B}$ for use by subroutines 01 - 07.
01	VECTOR MAGNITUDE	Calculates magnitudes of vectors $\vec{A}$ and $\vec{B}$.
02	ANGLE BETWEEN VECTOR AND AXES	Calculates the angle between each vector and the three axes.
03	ANGLE BETWEEN TWO VECTORS	Calculates the angle between vectors $\vec{A}$ and $\vec{B}$.
04	VECTOR SUM	Calculates the sum of vectors $\vec{A}$ and $\vec{B}$.
05	VECTOR DIFFERENCE	Calculates the difference between vectors $\vec{A}$ and $\vec{B}$.
06	DOT PRODUCT	Calculates the dot product of vectors $\vec{A}$ and $\vec{B}$, $\vec{A} \cdot \vec{B}$.
07	CROSS PRODUCT	Calculates the cross product of vectors $\vec{A}$ and $\vec{B}$, $\vec{A} \times \vec{B}$.

© Wang Laboratories, Inc., 1972

Printed in U.S.A.

PROGRAM TITLE	NUMBER
VECTOR ANALYSIS AND OPERATIONS	1028-2-MA3
	PAGE

GENERAL OPERATING PROCEDURE

The general operating procedure for use of any one or more of subroutines 01-07 is the following:

PRINTER	DISPLAY
1. Key PRIME, LOAD PROGRAM, VERIFY PROGRAM: Display should read 3509	1. Key PRIME, LOAD PROGRAM, VERIFY PROGRAM: Display should read 3561
2. Depress f(x), PRINTER ON;	2. Depress f(x);
3.* Store vectors $\vec{A}$ and $\vec{B}$ according to subroutine 00	3.* Store vectors $\vec{A}$ and $\vec{B}$ according to subroutine 00

*The vectors $\vec{A}$ and $\vec{B}$ must be stored in memory before any of subroutines 01 - 07 can be executed.

© Wang Laboratories, Inc.

PROGRAM TITLE	NUMBER
VECTOR ANALYSIS AND OPERATIONS	1028-2-MA3
	PAGE

STORE VECTORS

f(x) 00

Stores vectors $\vec{A}$ and $\vec{B}$ in memory*

$$\vec{A} = a_1\vec{i} + a_2\vec{j} + a_3\vec{k}$$

$$\vec{B} = b_1\vec{i} + b_2\vec{j} + b_3\vec{k},$$

where $\vec{i}$, $\vec{j}$, $\vec{k}$ are unit vectors

OPERATING PROCEDURE

PRINTER	DISPLAY
1. Key 00;	1. Key 00;
2. Key a_1, GO; a_1 labeled by "X"	2. Key a_1, GO;
3. Key a_2, GO; a_2 labeled by "Y"	3. Key a_2, GO;
4. Key a_3, GO; a_3 labeled by "Z"	4. Key a_3, GO;
5. Key b_1, GO; b_1 labeled by "X"	5. Key b_1, GO;
6. Key b_2, GO; b_2 labeled by "Y"	6. Key b_2, GO;
7. Key b_3, GO; b_3 labeled by "Z"	7. Key b_3, GO;

*Vectors $\vec{A}$ and $\vec{B}$ will remain in memory until they are changed by the above procedure.

© Wang Laboratories, Inc., 1970

EXAMPLE: Store

$$\vec{A} = 3\vec{i} + 0\vec{j} - 4\vec{k}$$

$$\vec{B} = 2\vec{i} - 2\vec{j} + 1\vec{k}$$

1. Key 00;
2. Key 3, GO;
3. Key 0, GO;
4. Key 4 CH SIGN GO;
5. Key 2 GO;
6. Key 2 CH SIGN GO;
7. Key 1 GO

```
 3.00000000   X
 0.00000000   Y
-4.00000000   Z

 2.00000000   X
-2.00000000   Y
 1.00000000   Z
```

1. Key 00;
2. Key 3, GO;
3. Key 0, GO;
4. Key 4 CH SIGN GO
5. Key 2 GO;
6. Key 2 CH SIGN GO
7. Key 1 GO

© Wang Laboratories, Inc., 197

VECTOR MAGNITUDE

f(x) 01

Given two vectors,

$$\vec{A} = a_1\vec{i} + a_2\vec{j} + a_3\vec{k}$$

$$\vec{B} = b_1\vec{i} + b_2\vec{j} + b_3\vec{k},$$

this subroutine calculates their magnitude,

$$|\vec{A}| = \sqrt{a_1^2 + a_2^2 + a_3^2}$$

$$|\vec{B}| = \sqrt{b_1^2 + b_2^2 + b_3^2}$$

OPERATING PROCEDURE

PRINTER

1. Key 01;
2. READ: $|\vec{A}|$ labeled by "A"
   $|\vec{B}|$ labeled by "B"

EXAMPLE: Given $\vec{A} = 3\vec{i} + 0\vec{j} - 4\vec{k}$ and

$\vec{B} = 2\vec{i} - 2\vec{j} + 1\vec{k}$,

calculate their magnitudes

1. Key 01;
2. READ:

```
5.00000000          A
3.00000000          B
```

DISPLAY

1. Key 01;
2. READ: $|\vec{A}|$, GO
   $|\vec{B}|$

1. Key 01;
2. READ: 5.000000000, GO;
   3.000000000

© Wang Laboratories, Inc., 1970

ANGLE BETWEEN VECTOR AND AXES

f(x) 02

Given two vectors,

$$\vec{A} = a_1\vec{i} + a_2\vec{j} + a_3\vec{k}$$

$$\vec{B} = b_1\vec{i} + b_2\vec{j} + b_3\vec{k},$$

this subroutine calculates the angles between each vector and the three axes.

The angles can be represented as follows:

$$\alpha_A = \cos^{-1}\frac{a_1}{|\vec{A}|}, \quad \text{vector } \vec{A} \text{ and X axis}$$

$$\beta_A = \cos^{-1}\frac{a_2}{|\vec{A}|}, \quad \text{vector } \vec{A} \text{ and Y axis}$$

$$\gamma_A = \cos^{-1}\frac{a_3}{|\vec{A}|}, \quad \text{vector } \vec{A} \text{ and Z axis}$$

$$\alpha_B = \cos^{-1}\frac{b_1}{|\vec{B}|}, \quad \text{vector } \vec{B} \text{ and X axis}$$

$$\beta_B = \cos^{-1}\frac{b_2}{|\vec{B}|}, \quad \text{vector } \vec{B} \text{ and Y axis}$$

$$\gamma_B = \cos^{-1}\frac{b_3}{|\vec{B}|}, \quad \text{vector } \vec{B} \text{ and Z axis}$$

© Wang Laboratories, Inc., 19

OPERATING PROCEDURE

PRINTER

1. Key 02;
2. READ: α_A labeled by "X"
   β_A labeled by "Y"
   γ_A labeled by "Z"
   α_B labeled by "X"
   β_B labeled by "Y"
   γ_B labeled by "Z"

DISPLAY

1. Key 02;
2. READ: α_A, GO,
   β_A, GO,
   γ_A, GO,
   α_B, GO,
   β_B, GO,
   γ_B;

EXAMPLE: Given $\vec{A} = 3\vec{i} + 0\vec{j} - 4\vec{k}$
$\vec{B} = 2\vec{i} - 2\vec{j} + 1\vec{k}$,

calculate the angles between the vectors and each of the three axes.

PRINTER

1. Key 02;
2. READ:

```
53.13010235      X
89.99999999      Y
143.1301023      Z

48.18968510      X
131.8103148      Y
70.52877936      Z
```

DISPLAY

1. Key 02;
2. READ: 53.13010235, GO,
   89.99999999, GO,
   143.1301023, GO,
   48.18968510, GO,
   131.8103148, GO,
   70.52877936

© Wang Laboratories, Inc., 1970

ANGLE BETWEEN TWO VECTORS

f(x) 03

Given two vectors,

$$\vec{A} = a_1\vec{i} + a_2\vec{j} + a_3\vec{k}$$

$$\vec{B} = b_1\vec{i} + b_2\vec{j} + b_3\vec{k},$$

the angle between them is given by:

$$\Theta = \cos^{-1}\left(\frac{a_1b_1 + a_2b_2 + a_3b_3}{|\vec{A}| \cdot |\vec{B}|}\right)$$

OPERATING PROCEDURE

PRINTER

1. Key 03;
2. READ: Θ labeled by "A"

DISPLAY

1. Key 03;
2. READ: Θ

EXAMPLE: Find the angle between the vectors.

$$\vec{A} = 3\vec{i} + 0\vec{j} - 4\vec{k} \text{ and } \vec{B} = 2\vec{i} - 2\vec{j} + 1\vec{k}$$

PRINTER

1. Key 03;
2. READ:

82.33774433 A

DISPLAY

1. Key 03;
2. READ: 82.33774433

© Wang Laboratories, Inc., 19

PROGRAM TITLE	NUMBER
VECTOR ANALYSIS AND OPERATIONS	1028-2-MA3
	PAGE

VECTOR SUM
f(x) 04

Given two vectors,

$$\vec{A} = a_1\vec{i} + a_2\vec{j} + a_3\vec{k}$$

$$\vec{B} = b_1\vec{i} + b_2\vec{j} + b_3\vec{k},$$

the sum is given by,

$$\vec{A} + \vec{B} = (a_1 + b_1)\vec{i} + (a_2 + b_2)\vec{j} + (a_3 + b_3)\vec{k}$$

OPERATING PROCEDURE

PRINTER

1. Key 04;
2. READ: $(a_1 + b_1)$ labeled by "X"
   $(a_2 + b_2)$ labeled by "Y"
   $(a_3 + b_3)$ labeled by "Z"

DISPLAY

1. Key 04;
2. READ: $(a_1 + b_1)$, GO,
   $(a_2 + b_2)$, GO,
   $(a_3 + b_3)$

EXAMPLE: Calculate the sum of $\vec{A} = 3\vec{i} + 0\vec{j} - 4\vec{k}$ and $\vec{B} = 2\vec{i} - 2\vec{j} + 1\vec{k}$.

PRINTER

1. Key 04;
2. READ:

```
 5.00000000    X
-2.00000000    Y
-3.00000000    Z
```

DISPLAY

1. Key 04;
2. READ: 5, GO,
   -2, GO,
   -3;

© Wang Laboratories, Inc., 1970

PROGRAM TITLE	NUMBER
VECTOR ANALYSIS AND OPERATIONS	1028-2-MA3
	PAGE

VECTOR DIFFERENCE

f(x) 05

Given two vectors,

$$\vec{A} = a_1\vec{i} + a_2\vec{j} + a_3\vec{k}$$

$$\vec{B} = b_1\vec{i} + b_2\vec{j} + b_3\vec{k},$$

their difference is given by;

$$\vec{A} - \vec{B} = (a_1 - b_1)\vec{i} + (a_2 - b_2)\vec{j} + (a_3 - b_3)\vec{k}$$

OPERATING PROCEDURE

PRINTER

1. Key 05;
2. READ: $(a_1 - b_1)$ labeled by "X"
   $(a_2 - b_2)$ labeled by "Y"
   $(a_3 - b_3)$ labeled by "Z"

DISPLAY

1. Key 05;
2. READ: $(a_1 - b_1)$, GO,
   $(a_2 - b_2)$, GO,
   $(a_3 - b_3)$;

EXAMPLE: Find the difference between $\vec{A} = 3\vec{i} + 0\vec{j} - 4\vec{k}$ and $\vec{B} = 2\vec{i} - 2\vec{j} + 1\vec{k}$.

PRINTER

1. Key 05;
2. READ:

```
 1.00000000    X
 2.00000000    Y
-5.00000000    Z
```

DISPLAY

1. Key 05;
2. READ: 1.000000000, GO,
   2.000000000, GO,
   -5.000000000;

© Wang Laboratories, Inc.

DOT PRODUCT

f(x) 06

Given two vectors,

$$\vec{A} = a_1\vec{i} + a_2\vec{j} + a_3\vec{k}$$

$$\vec{B} = b_1\vec{i} + b_2\vec{j} + b_3\vec{k},$$

the dot product is given by:

$$\vec{A} \cdot \vec{B} = |\vec{A}|\,|\vec{B}| \cos\Theta$$

where Θ is the angle between $\vec{A}$ and $\vec{B}$.

OPERATING PROCEDURE

PRINTER	DISPLAY
1. Key 06;	1. Key 06;
2. READ: $\vec{A} \cdot \vec{B}$ labeled by "D"	2. READ: $\vec{A} \cdot \vec{B}$

EXAMPLE: Calculate the dot product of $\vec{A} = 3\vec{i} + 0\vec{j} - 4\vec{k}$ and $\vec{B} = 2\vec{i} - 2\vec{j} + 1\vec{k}$.

1. Key 06;	1. Key 06;
2. READ:	2. READ: 2.000000000
2.00000000 D	

© Wang Laboratories, Inc., 1970

CROSS PRODUCT

f(x) 07

Given two vectors,

$$\vec{A} = a_1\vec{i} + a_2\vec{j} + a_3\vec{k}$$

$$\vec{B} = b_1\vec{i} + b_2\vec{j} + b_3\vec{k},$$

their cross product is given by:

$$\vec{A} \times \vec{B} = \begin{vmatrix} \vec{i} & \vec{j} & \vec{k} \\ a_1 & a_2 & a_3 \\ b_1 & b_2 & b_3 \end{vmatrix}$$

$$= (a_2b_3 - a_3b_2)\vec{i} + (a_3b_1 - a_1b_3)\vec{j} + (a_1b_2 - a_2b_1)\vec{k}$$

OPERATING PROCEDURE

PRINTER

1. Key 07;
2. READ: $(a_2b_3 - a_3b_2)$ labeled by "X"
   $(a_3b_1 - a_1b_3)$ labeled by "Y"
   $(a_1b_2 - a_2b_1)$ labeled by "Z"

DISPLAY

1. Key 07;
2. READ: $(a_2b_3 - a_3b_2)$, GO,
   $(a_3b_1 - a_1b_3)$, GO,
   $(a_1b_2 - a_2b_1)$

EXAMPLE: Calculate the cross product of $\vec{A} = 3\vec{i} + 0\vec{j} - 4\vec{k}$ and $\vec{B} = 2\vec{i} - 2\vec{j} + 1\vec{k}$.

PRINTER

1. Key 07;
2. READ:

```
-8.00000000   X
-11.00000000  Y
-6.00000000   Z
```

DISPLAY

1. Key 07;
2. READ: -8.000000000, GO,
   -11.00000000, GO
   -6.000000000

© Wang Laboratories, Inc.

520/600 SERIES PROGRAM DESCRIPTION

TITLE	NO.
ROOTS OF FUNCTIONS (Half Interval Search Method)	1029-2-MA2
	EQUIPMENT: 520-2/600-2
REGISTERS: 00-07, 15	MARKS: 1000 - 1002, 0000 - 0007
	DATE: March 31, 1971
	PROGRAMMER: John Patino

BLOCK	VERIFY NO. – PRINT	NO. OF STEPS – PRINT	VERIFY NO. – DISPLAY	NO. OF STEPS – DISPLAY
30	1811	159	1803	159

PROGRAM DESCRIPTION

This program will calculate all suitable points satisfying a given equation, $f(x) = 0$ in the interval $A \leq x \leq B$ using the half interval search method. A number n should be chosen such that $\Delta x = \frac{B-A}{n}$ is less than the shortest distance between any two roots in the given interval.

In order to evaluate a particular function, a subroutine must be written starting at step 133 in the following manner:

```
133     MARK
134     1001
 .       |
 .       v
 .      f(x)
        |
        v
      RETURN
      END PROG
```

Note: Subroutine must start with MARK 1001 and x_i must initially be in the display. The value of f(x) should be in the display before the return command.

Registers 06 - 15 may be used as work register and all with the exception of 15 may be used as permanent storage registers.

© Wang Laboratories, Inc., 1972

Printed in U.S.A.

PROGRAM TITLE	NUMBER
ROOTS OF FUNCTIONS(Half Interval Search Method)	1029-2-MA2
	PAGE

OPERATING PROCEDURE

PRINTER

1. Key PRIME, LOAD PROGRAM; Prepare and enter subroutine, Key VERIFY PROGRAM: verify number will vary according to subroutine entered
2. Depress f(x), PRINTER ON;
3. Key A; A labeled by "A"
4. Key 00;
5. Key B, GO; B labeled by "B"
6. Key n, GO; n labeled by "M"
7. READ: x_i labeled by "X"

DISPLAY

1. Key PRIME, LOAD PROGRAM; Prepare and enter subroutine, Key VERIFY PROGRAM: verify number will vary according to subroutine entered
2. Depress f(x);
3. Key A;
4. Key 00;
5. Key B, GO;
6. Key n, GO;
7. READ: x_i, GO

   Repeat step 7 to get all real roots. When all real roots have been calculated, display will be clear.

EXAMPLE: Calculate the roots which satisfy $x^3 - 16x^2 + 73x - 90 = 0$ from A = 1 to B = 10 with n = 9.

© Wang Laboratories, Inc.

The subroutine for $x^3 - 16x^2 + 73x - 90 = 0$ looks like this:

0133	09	00	* M	
0134	10	01	f 1	
0135	06	06	ST 6	X_i in display
0136	06	15	ST 15	
0137	00	07	E 7	
0138	00	03	E 3	
0139	04	15	× 15	73 X
0140	06	07	ST 7	
0141	07	06	RE 6	
0142	08	12	* x^2	
0143	06	15	ST 15	
0144	00	01	E 1	
0145	00	06	E 6	
0146	04	15	× 15	$16 X^2$
0147	03	07	- 7	$-16 X^2 + 73 X$
0148	07	06	RE 6	
0149	06	15	ST 15	
0150	08	12	* x^2	
0151	04	15	× 15	
0152	07	07	RE 7	
0153	02	15	+ 15	$X^3 - 16 X^2 + 73 X$
0154	00	09	E 9	
0155	00	00	E 0	
0156	03	15	- 15	$X^3 - 16 X^2 + 73 X - 90$, f(x) in display
0157	09	15	* RT	
0158	09	14	* EP	

1. Key PRIME, LOAD PROGRAM, VERIFY PROGRAM: Display should read 1811;
2. Depress f(x), PRINTER ON;
3. Key 1;
4. Key 00;
5. Key 1 0, GO;

1. Key PRIME, LOAD PROGRAM, VERIFY PROGRAM: Display should read 1803;
2. Depress f(x);
3. Key 1;
4. Key 00;
5. Key 1 0, GO;

© Wang Laboratories, Inc., 1970

PROGRAM TITLE	NUMBER
ROOTS OF FUNCTIONS (Half Interval Search Method)	1029-2-MA2
	PAGE

6. Key 9, GO;

7. READ:

1.00000000	A
10.00000000	B
9.00000000	M
2.00000000	X
5.00000000	X
9.00000000	X

6. Key 9, GO;

7. READ: 2.000000000, GO,
5.000000000, GO,
9.000000000, GO
DISPLAY CLEAR

© Wang Laboratories, Inc., 1970

520/600 SERIES PROGRAM DESCRIPTION

TITLE	NO.
ROOTS OF EQUATIONS	1030-6-MA2
	EQUIPMENT: 520-6/600-6
REGISTERS: 00 - 15	MARKS: 1002, 1003, 1100 - 1109, 1110, 1111
	DATE: January, 1972
	PROGRAMMER: James J. Gibson

BLOCK	VERIFY NO. – PRINT	NO. OF STEPS – PRINT	VERIFY NO. – DISPLAY	NO. OF STEPS – DISPLAY
30	5875	426	5478	385

PROGRAM DESCRIPTION:

This program calculates the real and/or complex roots of a quadratic or a cubic equation.

For a quadratic equation expressed as $ax^2 + bx + c = 0$ the roots are calculated by:

$$x = \frac{-b \pm \sqrt{b^2 - 4ac}}{2a} \qquad \text{for } a \neq 0$$

If a,b,c are real coefficients and
If $b^2 - 4ac > 0$, the roots are real and unequal
If $b^2 - 4ac = 0$, the roots are real and equal.
If $b^2 - 4ac < 0$, the roots are imaginary.

For a cubic equation expressed as $a' x^3 + b' x^2 + c'x + d = 0$, where $a \neq 0$ and the coefficients are real; the roots are calculated as follows:

The equation is written as $x^3 + ax^2 + bx + c = 0$

where $a = \frac{b'}{a'}$, $b = \frac{c'}{a'}$, and $c = \frac{d'}{a'}$

We now make a substitution: $x = y - \frac{a}{3}$ to yield $y^3 + py + q = 0$

where $p = -\frac{a^2}{3} + b$ and $q = 2\left(\frac{a}{3}\right)^3 - \frac{ab}{3} + c$

$$Q = \left(\frac{p}{3}\right)^3 + \left(\frac{q}{2}\right)^2$$

© Wang Laboratories, Inc., 1972

Printed in U.S.A.

PROGRAM TITLE	NUMBER
ROOTS OF EQUATIONS	1030-6-MA2
	PAGE

The following trigonometric solution is used to obtain the roots

a.) if $Q < 0$,

$$y_1 = 2\sqrt{-p/3}\ \cos\left(\frac{\alpha}{3}\right)$$

$$y_{2,3} = -2\sqrt{-p/3}\ \cos\left(\frac{\alpha}{3} \pm 60\right)$$

$$\text{where } \cos\alpha = -\frac{q}{2\sqrt{-(p/3)^3}}$$

b.) If $Q \geq 0_1\ p > 0$,

$$y_1 = 2\sqrt{-p/3}\ \cot 2\alpha$$

$$y_{2,3} = \sqrt{p/3}\ (\cot 2 \pm i\sqrt{3}\ \operatorname{cosec} 2\alpha)$$

$$\text{where } \tan\alpha = \sqrt[3]{\operatorname{Tan}\beta/2} \quad (|\alpha| \leq 45°)$$

$$\text{and } \tan\beta = 2\sqrt{(p/3)^3/q} \quad (|\beta| \leq 90°)$$

c.) If $Q \geq 0$, $p < 0$,

$$y_1 = -2\sqrt{-p/3}\ \operatorname{cosec} 2\alpha$$

$$y_{2,3} = \sqrt{-p/3}\ (\operatorname{cosec} 2\alpha \pm i\sqrt{3}\ \cot\alpha)$$

$$\text{where } \tan\alpha = \sqrt[3]{\tan(\beta/2)} \quad (|\alpha| < 45°)$$

$$\text{and } \sin\beta = 2\sqrt{(-p/3)^3/q} \quad (|\beta| \leq 90°)$$

Reference: Mathematical Handbook for Scientists and Engineers, G.A. Korn and T.M. Korn.

OPERATING PROCEDURE FOR A QUADRATIC EQUATION

PRINTER	DISPLAY
1. Key PRIME, LOAD PROGRAM, VERIFY PROGRAM: Display should read 5875;	1. Key PRIME, LOAD PROGRAM, VERIFY PROGRAM: Display should read 5478;
2. Depress f(x), PRINTER ON;	2. Depress f(x);

© Wang Laboratories, Inc. 1972

3. Key 02;

4. Key a GO;

   a labeled by A

5. Key b GO;

   b labeled by B

6. Key c GO;

   c labeled by C

7. CASE 1: Real and Unequal roots

   READ: both roots labeled by X;

   CASE 2: Real and Equal roots

   READ: equal root labeled by E;

   CASE 3: Imaginary roots

   READ: real portion labeled by X followed by ± imaginary portion labeled by I;

3. Key 02;

4. Key a GO;

5. Key b GO;

6. Key c GO;

7. CASE 1: Real and Unequal roots

   READ: first root, Key GO
   Second root;

   CASE 2: Real and Equal roots

   READ: one root, Key GO
   Display remains unchanged indicating that both roots are equal.

   CASE 3: Imaginary roots

   READ: real portion, Key GO
   Display will be clear indicating that the equation has imaginary roots,
   Key GO
   READ: ± imaginary part;

Example of an equation with real and unequal roots: $x^2 - 3x + 2 = 0$
Calculate its roots.

PRINTER

1. Key PRIME, LOAD PROGRAM, VERIFY PROGRAM: Display should read 5875;

2. Depress f(x), PRINTER ON

DISPLAY

1. Key PRIME, LOAD PROGRAM, VERIFY PROGRAM: Display should read 5478;

2. Depress f(x)

© Wang Laboratories, Inc. 1972

3. Key 02;
4. Key 1 GO;
5. Key 3 CH SIGN GO;
6. Key 2 GO;
7. READ: 2. X

1.00000000 A
-3.00000000 B
2.00000000 C

2.00000000 X
1.00000000 X

3. Key 02;
4. Key 1 GO;
5. Key 3 CH SIGN GO;
6. Key 2 GO;
7. READ: 2.000000000 GO,
1.000000000

Since the numbers are different we have real and unequal roots

Example of an equation with real and equal roots: $x^2 - 4x + 4 = 0$
Calculate its roots.

PRINTER

1. Key PRIME, LOAD PROGRAM, VERIFY PROGRAM: Display should read 5875;
2. Depress f(x), PRINTER ON;
3. Key 02;
4. Key 1 GO;
5. Key 4 CH SIGN GO;
6. Key 4 GO;

DISPLAY

1. Key PRIME, LOAD PROGRAM, VERIFY PROGRAM: Display should read 5478;
2. Depress f(x);
3. Key 02;
4. Key 1 GO;
5. Key 4 CH SIGN GO;
6. Key 4 GO;

© Wang Laboratories, Inc. 1972

7. READ:
```
          2.          X

 1.00000000           A
-4.00000000           B
 4.00000000           C


 2.00000000           E
```

7. READ: 2.000000000 GO,
2.000000000

Since the numbers are equal we have equal and real roots.

Example of an equation with imaginary roots: $2x^2 - 5x + 5 = 0$
Calculate its roots.

PRINTER

1. Key PRIME, LOAD PROGRAM, VERIFY PROGRAM: Display should read 5875;
2. Depress f(x), PRINTER ON;
3. Key 02;
4. Key 2 GO;
5. Key 5 CH SIGN GO;
6. Key 5 GO;
7. READ:
```
          2.          X

 2.00000000
-5.00000000           A
 5.00000000           B
                      C


 1.25000000
 .96824583            X
                      I
```

DISPLAY

1. Key PRIME, LOAD PROGRAM, VERIFY PROGRAM: Display should read 5478;
2. Depress f(x);
3. Key 02;
4. Key 2 GO;
5. Key 5 CH SIGN GO;
6. Key 5 GO;
7. READ: 1.250000000 GO

Since the display is clear we have imaginary roots of which 1.25 is the real portion, Key GO
READ: ± .9682458365
(imaginary portion)

© Wang Laboratories, Inc. 1972

OPERATING PROCEDURE FOR A CUBIC EQUATION

PRINTER

1. Key PRIME, LOAD PROGRAM, VERIFY PROGRAM: Display should read 5875;
2. Depress f(x), PRINTER ON;
3. Key 03;
4. Key a′ GO;
   a′ labeled by A
5. Key b′ GO;
   b′ labeled by B
6. Key c′ GO;
   c′ labeled by C
7. Key d′ GO;
   d′ labeled by D
8. CASE 1: Three real roots

   READ: x_1, x_2, x_3
   all labeled by X

   CASE 2: Three real roots, two of which are equal.

   READ: equal root labeled by E, other root labeled by X

DISPLAY

1. Key PRIME, LOAD PROGRAM, VERIFY PROGRAM: Display should read 5475;
2. Depress f(x);
3. Key 03;
4. Key a′ GO;
5. Key b′ GO;
6. Key c′ GO;
7. Key d′ GO;
8. CASE 1: Three real roots

   READ: x_1 GO,
   x_2 GO,
   x_3

   If x_1, x_2, x_3 are all different it indicates three real unequal roots.

   CASE 2: Three real roots, two of which are equal.

   READ: x_1 GO,
   x_2 GO,
   x_3

© Wang Laboratories, Inc. 1972

CASE 3: One real, two complex roots

READ: Real root labeled by X,
Complex roots: real portion labeled by X
± imaginary portion labeled by I

CASE 4: Three real roots all of which are equal.

READ: root labeled by E

If $x_2 = x_3$ it indicates equal roots.

READ: x_1 (real root) GO
x_2 GO

If the display is clear, it indicates that the equation has two complex roots of which x_2 is the real portion. Key GO

READ: ± imaginary portion.

CASE 4: Three real roots all of which are equal.

READ: x_1 GO,
x_2 GO,
x_3

Since $x_1 = x_2 = x_3$ we have three equal real roots.

Example of an equation with three real roots $2x^3 - x^2 - 43x + 60 = 0$
Calculate its roots.

PRINTER

1. Key PRIME, LOAD PROGRAM, VERIFY PROGRAM: Display should read 5875;
2. Depress f(x), PRINTER ON;
3. Key 03;
4. Key 2 GO;
5. Key 1 CH SIGN GO;
6. Key 4 3 CH SIGN GO;
7. Key 6 0 GO;

DISPLAY

1. Key PRIME, LOAD PROGRAM, VERIFY PROGRAM: Display should read 5478;
2. Depress f(x);
3. Key 03;
4. Key 2 GO;
5. Key 1 CH SIGN GO;
6. Key 4 3 CH SIGN GO;
7. Key 6 0 GO;

© Wang Laboratories, Inc. 1972

8. READ: 3. X

2.00000000 A
-1.00000000 B
-43.00000000 C
60.00000000 D

3.99999999 X
1.49999999 X
-4.99999999 X

8. READ: 3.999999999 GO,
1.499999999 GO,
-4.999999999

Example of an equation with three real roots, two of which are equal $x^3 - 3x^2 + 4 = 0$
Calculate its roots

PRINTER

1. Key PRIME, LOAD PROGRAM, VERIFY PROGRAM: Display should read 5875;
2. Depress f(x), PRINTER ON;
3. Key 03;
4. Key 1 GO;
5. Key 3 CH SIGN GO;
6. Key 0 GO;
7. Key 4 GO;
8. READ: 3. X

1.00000000 A
-3.00000000 B
0.00000000 C
4.00000000 D

-1.00000000 X
2.00000000 E

DISPLAY

1. Key PRIME, LOAD PROGRAM, VERIFY PROGRAM: Display should read 5478;
2. Depress f(x);
3. Key 03;
4. Key 1 GO;
5. Key 3 CH SIGN GO;
6. Key 0 GO;
7. Key 4 GO;
8. READ: -1.000000000 GO,
2.000000000 GO,
2.000000000

© Wang Laboratories, Inc. 1972

Example of an equation with one real root and two complex roots: $2x^3 + 5x^2 - 20x + 25 = 0$
Calculate the roots.

PRINTER

1. Key PRIME, LOAD PROGRAM, VERIFY PROGRAM: Display should read 5875;
2. Depress f(x), PRINTER ON;
3. Key 03;
4. Key 2 GO;
5. Key 5 GO;
6. Key 2 0 CH SIGN GO;
7. Key 2 5 GO;
8. READ: 3. X

```
 2.00000000   A
 5.00000000   B
-20.00000000  C
 25.00000000  D

-4.99999999   X

 1.24999999   X
  .96824583   I
```

DISPLAY

1. Key PRIME, LOAD PROGRAM, VERIFY PROGRAM: Display should read 5478;
2. Depress f(x);
3. Key 03;
4. Key 2 GO;
5. Key 5 GO;
6. Key 2 0 CH SIGN GO;
7. Key 2 5 GO;
8. READ: -4.999999999 GO,
   1.249999999 GO

   Since the display is clear we have two complex roots of which 1.249999999 is the real portion, Key GO

   READ: ± .9682458366 (imaginary portion)

Example of an equation with three equal roots: $x^3 + 3x^2 + 3x + 1 = 0$
Calculate the roots.

PRINTER

1. Key PRIME, LOAD PROGRAM, VERIFY PROGRAM: Display should read 5875;
2. Depress f(x), PRINTER ON;
3. Key 03;

DISPLAY

1. Key PRIME, LOAD PROGRAM, VERIFY PROGRAM: Display should read 5478;
2. Depress f(x);
3. Key 03;

© Wang Laboratories, Inc. 1972

4. Key 1 GO;

5. Key 3 GO;

6. Key 3 GO;

7. Key 1 GO;

8. READ: 3. X

1.00000000 A
3.00000000 B
3.00000000 C
1.00000000 D

-1.00000000 E

4. Key 1 GO;

5. Key 3 GO;

6. Key 3 GO;

7. Key 1 GO;

8. READ: -1.000000000 GO,
-1.000000000 GO,
-1.000000000

© Wang Laboratories, Inc. 1972

520/600 SERIES PROGRAM DESCRIPTION

TITLE	NO.
GAMMA FUNCTION, $\Gamma(x)$	1031-2-MA1
	EQUIPMENT: 520-2/600-2
REGISTERS: 00-06, 14, 15 / MARKS: 1000, 1100-1102	DATE: April 14, 1971
	PROGRAMMER: James J. Gibson

BLOCK	VERIFY NO. – PRINT	NO. OF STEPS – PRINT	VERIFY NO. – DISPLAY	NO. OF STEPS – DISPLAY
32	1817	192	1806	192

PROGRAM DESCRIPTION

This program calculates $\Gamma(x)$ for integer and non-integer values of x with limitation $0 \leq x \leq 70.4$.

The following technique is used to evaluate $\Gamma(x)$ in one of the three possible regions:

Region 1: $0 \leq x < 1$

$$\Gamma(x) = \frac{\Gamma(Z+1)}{Z} \quad \text{where: } Z = x$$

Region 2: $1 \leq x < 2$

$\Gamma(x) = \Gamma(1+Z)$ where: $Z = x - 1$ = decimal portion of number

Region 3: $2 < x \leq 70.4$

$\Gamma(x) = (x-1)\,(x-2)\ldots\,(1+Z)\,\Gamma(1+Z)$ where Z = decimal portion of x.

© Wang Laboratories, Inc., 1972

Printed in U.S.A.

PROGRAM TITLE	NUMBER
GAMMA FUNCTION	1031-2-MA1
	PAGE

We define $\Gamma(1+Z) = 1 + \sum_{i=1}^{8} a_i Z^i + |\epsilon(x)|$

where: $\epsilon(x)$ is the error term s.t.

$|\epsilon(x)| < 3 \times 10^{-7}$ and $0 \leq Z < 1$.

The constants, a_i, are obtained from "Handbook of Mathematical Functions," NBS Applied Mathematics Series · 55.

OPERATING PROCEDURE

PRINTER

1. Key PRIME, LOAD PROGRAM, VERIFY PROGRAM: Display should read 1817
2. Depress f(x), PRINTER ON;
3. Key x, 00;
   x labeled by "X"
4. READ: $\Gamma(x)$ labeled by "G"

DISPLAY

1. Key PRIME, LOAD PROGRAM, VERIFY PROGRAM: Display should read 1806
2. Depress f(x);
3. Key x, 00;
4. READ: $\Gamma(x)$

EXAMPLES: Find $\Gamma(x)$ for x = 0, 1/2, 1.615 and 20.5.

PRINTER

1. Key PRIME, LOAD PROGRAM, VERIFY PROGRAM: Display should read 1817
2. Depress f(x), PRINTER ON;
3. Key 0, 00;
   READ:

```
0.00000000    X
1.00000000    G
```

   Key . 5, 00;
   READ:

```
 .50000000    X
1.77245399    G
```

DISPLAY

1. Key PRIME, LOAD PROGRAM, VERIFY PROGRAM: Display should read 1806
2. Depress f(x);
3. Key 0, 00;
   READ: 1.000000000

   Key . 5, 00;
   READ: 1.772453991

© Wang Laboratories, Inc., 19

PROGRAM TITLE

GAMMA FUNCTION

NUMBER 1031-2-MA1

PAGE

Key 1.615, 00;
READ:

```
1.61500000          X
 .89529258          G
```

Key 20.5, 00;
READ:

```
20.50000000         X
5.406243411 +17
```

Key 1.615, 00;
READ: .8952925835

Key 20.5, 00;
READ: 5.406243411 + 17

© Wang Laboratories, Inc., 1970

520/600 SERIES PROGRAM DESCRIPTION

TITLE	NO.
COMPLEX NUMBER CALCULATOR	1032-2-MA6
	EQUIPMENT: 520-2/600-2
REGISTERS: 00-07, 14, 15 — MARKS: 1000-1009, 1015, 1100-1104, 0515	DATE: December 11, 1970
	PROGRAMMER: E. Thibeault

BLOCK	VERIFY NO. – PRINT	NO. OF STEPS – PRINT	VERIFY NO. – DISPLAY	NO. OF STEPS – DISPLAY
33	2634	192	2638	192

PROGRAM DESCRIPTION:

Given 2 complex numbers, $Z_1 = x_1 + jy_1$ and $Z_2 = x_2 + jy_2$, this program calculates any of the following: $Z_1 + Z_2$, $Z_1 - Z_2$, $Z_1 Z_2$, $Z_1 \div Z_2$, $1/Z_1$, Z_1^2, $\sqrt{Z_1}$, $Z_1 Z_2/(Z_1 + Z_2)$.

OPERATING PROCEDURE

PRINTER

1. Key PRIME, LOAD PROGRAM, VERIFY PROGRAM: Display should read 2634;
2. Depress f(x), PRINTER ON;
3. Key x_1, STORE LEFT
   y_1, STORE RIGHT
   where x_1 = real part of Z_1
   y_1 = imaginary part of Z_1

   To print these values,
   Key 15;
   READ: x_1 labeled by "X"
   y_1 labeled by "Y"
4. Key 0A (A is a number between 0 and 7)

   $00 = Z_1 + Z_2$
   $01 = Z_1 - Z_2$
   $02 = Z_1 \times Z_2$

DISPLAY

1. Key PRIME, LOAD PROGRAM, VERIFY PROGRAM: Display should read 2638;
2. Depress f(x);
3. Key x_1, STORE LEFT
   y_1, STORE RIGHT
   where x_1 = real part of Z_1
   y_1 = imaginary part of Z_1
4. Key 0A (A is a number between 0 and 7)

   $00 = Z_1 + Z_2$
   $01 = Z_1 - Z_2$
   $02 = Z_1 \times Z_2$

© Wang Laboratories, Inc., 1972

Printed in U.S.A.

$03 = Z_1 \div Z_2$

$04 = 1/Z_1$

$05 = Z_1^2$

$06 = \sqrt{Z_1}$

$07 = \dfrac{Z_1 Z_2}{Z_1 + Z_2}$

5. If you have keyed:

A. 00 to calculate $Z_3 = Z_1 + Z_2$

Key x_2, GO,
y_2, GO;
READ: x_3 labeled by "X"
y_3 labeled by "Y"

B. 01 to calculate $Z_3 = Z_1 - Z_2$

Key x_2, GO,
y_2, GO;
READ: x_3 labeled by "X"
y_3 labeled by "Y"

C. 02 to calculate $Z_3 = Z_1 \times Z_2$

Key x_2, GO,
y_2, GO;
READ: x_3 labeled by "X"
y_3 labeled by "Y"

D. 03 to calculate $Z_3 = Z_1 \div Z_2$,

Key x_2, GO,
y_2, GO;
READ: x_3 labeled by "X"
y_3 labeled by "Y"

$03 = Z_1 \div Z_2$

$04 = 1/Z_1$

$05 = Z_1^2$

$06 = \sqrt{Z_1}$

$07 = \dfrac{Z_1 Z_2}{Z_1 + Z_2}$

5. If you have keyed:

A. 00 to calculate $Z_3 = Z_1 + Z_2$

Key x_2, GO,
y_2, GO;
READ: x_3, GO
y_3

B. 01 to calculate $Z_3 = Z_1 - Z_2$

Key x_2, GO,
y_2, GO;
READ: x_3, GO
y_3

C. 02 to calculate $Z_3 = Z_1 \times Z_2$

Key x_2, GO,
y_2, GO;
READ: x_3, GO
y_3

D. 03 to calculate $Z_3 = Z_1 \div Z_2$,

Key x_2, GO,
y_2, GO;
READ: x_3, GO
y_3

© Wang Laboratories, Inc., 1970

PROGRAM TITLE	NUMBER
COMPLEX NUMBER CALCULATOR	1032-2-MA6
	PAGE

E. 04 to calculate $Z_2 = \frac{1}{Z_1}$

READ: x_2 labeled by "X"
y_2 labeled by "Y"

F. 05 to calculate $Z_2 = Z_1^2$

READ: x_2 labeled by "X"
y_2

G. 06 to calculate $Z_2 = \sqrt{Z_1}$

READ: x_2 labeled by "X"
y_2 labeled by "Y"

H. 07 to calculate $Z_3 = \frac{Z_1 Z_2}{Z_1 + Z_2}$

Key x_2, GO,
y_2, GO;

READ: x_3 labeled by "X"
y_3 labeled by "Y"

E. 04 to calculate $Z_2 = \frac{1}{Z_1}$

READ: x_2, GO
y_2

F. 05 to calculate $Z_2 = Z_1^2$

READ: x_2, GO
y_2

G. 06 to calculate $Z_2 = \sqrt{Z_1}$

READ: x_2, GO
y_2

H. 07 to calculate $Z_3 = \frac{Z_1 Z_2}{Z_1 + Z_2}$

Key x_2, GO,
y_2, GO;

READ: x_3, GO

EXAMPLE: For $Z_1 = 2 - 3j$ and $Z_2 = 4 + j$, calculate $Z_1 + Z_2$.

1. Key PRIME, LOAD PROGRAM, VERIFY PROGRAM: Display should read 2634
2. Depress f(x), PRINTER ON;
3. Key 2, STORE LEFT
   3, CH SIGN, STORE RIGHT 15

READ:

2.000000000 X
-3.000000000 Y

1. Key PRIME, LOAD PROGRAM, VERIFY PROGRAM: Display should read 2638
2. Depress f(x);
3. Key 2, STORE LEFT
   3, CH SIGN, STORE RIGHT

© Wang Laboratories, Inc., 1970

4. Key 03;

5. Key 4, GO,
   1, GO;

   READ:

   .2941176470 X
   -.8235294117 Y

4. Key 03;

5. Key 4, GO,
   1, GO;

   READ: .2941176470, GO
   -.8235294117

EXAMPLE OF CHAINING OPERATIONS

$$Z_3 = \frac{Z_1 Z_2}{Z_1 - Z_2}$$ where $Z_1 = 2-3j$ and $Z_2 = 4+j$

1. Key PRIME, LOAD PROGRAM, VERIFY PROGRAM: Display should read 2634

2. Depress f(x), PRINTER ON;

3. Key 2, STORE LEFT
   3, CH SIGN, STORE RIGHT
   Key 15
   READ:
   2.000000000 X
   -3.000000000 Y
   Key 01;

   Key 4, GO,
   1, GO;
   READ:

   -2.000000000 X
   -4.000000000 Y

1. Key PRIME, LOAD PROGRAM, VERIFY PROGRAM: Display should read 2638

2. Depress f(x);

3. Key 2, STORE LEFT
   3, CH SIGN, STORE RIGHT

   Key 01;

   Key 4, GO,
   1, GO;
   READ: -2.000000000, GO
   -4.000000000

© Wang Laboratories, Inc., 1970

PROGRAM TITLE	NUMBER
COMPLEX NUMBER CALCULATOR	1032-2-MA6
	PAGE

Key 03;

Key 2, GO,
3, CH SIGN, GO;
READ:

.6153846153 X
-1.076923076 Y

Key 03;

Key 4, GO,
1, GO;
READ:

.0814479638 X
-.2895927601 Y

Key 04;
READ:

.9000000000 X
3.200000000 Y

Key 03;

Key 2, GO,
3, CH SIGN, GO;
READ: .6153846153, GO
-1.076923076

Key 03;

Key 4, GO,
1, GO;
READ: .0814479638, GO
-.2895927601

Key 04;
READ: .9000000000, GO
3.200000000

© Wang Laboratories, Inc., 1970

520/600 SERIES PROGRAM DESCRIPTION

TITLE	NO.
POLAR ⟶ RECTANGULAR RECTANGULAR ⟶ POLAR	1033-2-MA1
	EQUIPMENT 520-2/600-2

REGISTERS	MARKS	DATE
13 - 15	1000, 1001, 1000	December 14, 1970
		PROGRAMMER E. Thibeault

BLOCK	VERIFY NO. – PRINT	NO. OF STEPS – PRINT	VERIFY NO. – DISPLAY	NO. OF STEPS – DISPLAY
34	913	54	913	54

PROGRAM DESCRIPTION:

This program consists of 2 subroutines. One transforms polar coordinates (r, θ) to rectangular (x,y). The other transforms rectangular coordinates to polar.

This program has no need for printer and may be used as a subroutine of another program.

θ will be either radians or decimal degrees, depending on the setting of the RAD/DEG switch. In the POLAR⟶RECTANGULAR routine, the limits of θ are $\pm 180^{\circ}$.

OPERATING PROCEDURE

POLAR TO RECTANGULAR

1. Key PRIME, LOAD PROGRAM, VERIFY PROGRAM: Display should read 913;
2. Depress f(x);
3. Key 00;
4. Key θ , GO;
5. Key r, GO;
6. READ: x, GO
   y

RECTANGULAR TO POLAR

1. Key PRIME, LOAD PROGRAM, VERIFY PROGRAM: Display should read 913;
2. Depress f(x);
3. Key 01;
4. Key x , GO;
5. Key y , GO;
6. READ: θ , GO
   r

© Wang Laboratories, Inc., 1972

Printed in U.S.A.

PROGRAM TITLE	NUMBER
POLAR ⟶ RECTANGULAR RECTANGULAR ⟶ POLAR	1033-2-MA1
	PAGE

EXAMPLE 1

Transform (135°, 10) to rectangular coordinates

1. Key PRIME, LOAD PROGRAM, VERIFY PROGRAM: Display should read 913
2. Depress f(x); (RAD/DEG switch UP)
3. Key 00;
4. Key 1 3 5, GO;
5. Key 1 0, GO;
6. READ: -7.071067811, GO
   7.071067812

EXAMPLE 2

Transform (3, -4) to polar coordinates.

1. Key PRIME, LOAD PROGRAM, VERIFY PROGRAM: Display should read 913
2. Depress f(x); (RAD/DEG switch UP)
3. Key 01;
4. Key 3, GO;
5. Key 4 CH SIGN, GO;
6. READ: -53.13010235, GO
   5.000000000

© Wang Laboratories, Inc., 1970

520/600 SERIES PROGRAM DESCRIPTION

TITLE	NO.
INVOLUTE	1034-2-ME1
	EQUIPMENT: 520-2/600-2

REGISTERS	MARKS	DATE	PROGRAMMER
00,01,14,15	1000, 1001, 1100, 1101	March 24, 1971	James J. Gibson

BLOCK	VERIFY NO. – PRINT	NO. OF STEPS – PRINT	VERIFY NO. – DISPLAY	NO. OF STEPS – DISPLAY
35	1437	109	1409	109

PROGRAM DESCRIPTION:

For a given $\emptyset$ (in degrees), this program will calculate the involute INV ($\emptyset$). For a given value of INV ($\emptyset$), it will calculate $\emptyset$ (in degrees) .

$$\text{INV}(\emptyset) = \text{TAN}\,\emptyset - \emptyset$$

An iteration technique is used for solving $\emptyset$ for a given INV ($\emptyset$).

Ranges: $.15° < \emptyset < 89.99998°$

$$1 \times 10^{-9} \leq \text{INV}(\emptyset) \leq 2.5 \times 10^{6}$$

© Wang Laboratories, Inc., 1972

Printed in U.S.A.

PROGRAM TITLE	NUMBER
INVOLUTE	1034-2-ME1
	PAGE

OPERATING PROCEDURE

PRINTER

1. Key PRIME, LOAD PROGRAM, VERIFY PROGRAM: Display should read 1437
2. Depress f(x), RAD←→DEG, PRINTER ON;
3. To find involute for a given ϕ (in degrees), Key ϕ, 00;
   READ: ϕ labeled by "D"
   INV(ϕ) labeled by "I"
4. To find ϕ for a given involute value, Key INV(ϕ), 01;
   READ: INV(ϕ) labeled by "I"
   ϕ labeled by "D"

DISPLAY

1. Key PRIME, LOAD PROGRAM, VERIFY PROGRAM: Display should read 1409
2. Depress f(x), RAD←→DEG;
3. To find involute for a given ϕ (in degrees)
   Key ϕ, 00;
   READ: INV(ϕ)
4. To find ϕ for a given involute value,
   Key INV(ϕ), 01;
   READ: ϕ

EXAMPLE: Find involute for ϕ = 1 degree and then verify by finding ϕ from calculated involute.

1. Key PRIME, LOAD PROGRAM, VERIFY PROGRAM: Display should read 1437
2. Depress f(x), RAD←→DEG, PRINTER ON;
3. Key 1, 00;
   READ:

```
1.0000000                D
1.772405300 -06          I
```

4. Key 1 . 7 7 2 4 0 5 8 SET EXP 6 CH SIGN, 01;
   READ:

```
1.772405800 -06          I
1.0000003                D
```

1. Key PRIME, LOAD PROGRAM, VERIFY PROGRAM: Display should read 1409
2. Depress f(x), RAD←→DEG;
3. Key 1, 00;
   READ: .0000017724
4. Key 1 . 7 7 2 4 SET EXP 6 CH SIGN, 01;
   READ: 1.000000383

© Wang Laboratories, Inc., 1970

The following is a sample output for other examples in which data was inputted as in steps 3 and 4:

```
 30.0000000          D

5.375149359 -02      I


5.375149359 -02      I

 30.0000000          D

 85.0000000          D

9.946522437 +00      I


9.946522437 +00      I

 85.0000000          D
```

© Wang Laboratories, Inc., 1970

520/600 SERIES PROGRAM DESCRIPTION

TITLE	NO.
SPRING DESIGN - COMPRESSION & EXTENSION SPRINGS	1035-2-ME1
	EQUIPMENT: 520-2/600-2

REGISTERS	MARKS	DATE
01-05, 14, 15	1000-1008, 1100	March 24, 1971
		PROGRAMMER: James J. Gibson

BLOCK	VERIFY NO. – PRINT	NO. OF STEPS – PRINT	VERIFY NO. – DISPLAY	NO. OF STEPS – DISPLAY
36	1915	138	1893	138

PROGRAM DESCRIPTION

This program calculates the maximum allowable stress by first calculating one of three variables, diameter of wire, number of turns of wire, or mean coil diameter given the other two.

By using the relationship,

$$K = \frac{Gd^4}{8ND^3}$$

we can solve for one of three variables d, N or D given the other two and use the results for calculating maximum allowable stress:

$$S = \frac{8FD}{\pi d^3} \quad Kw_2$$

where $Kw_2 = 1 + \frac{.5d}{D}$

© Wang Laboratories, Inc., 1972

Printed in U.S.A.

F, K and G are predetermined and held constant

S = maximum allowable stress (lbs/in^2)
F = maximum load (lbs)
d = wire diameter (inches)
D = mean coil diameter (inches)
N = number of active coils
G = modules of rigidity
K = spring constant

REFERENCE: "Theory and Problems of Machine Design," A.S. Hall, A.R. Holowenko, and H.G. Laughlin. Schaum's Outline Series, New York, 1961.

© Wang Laboratories, Inc., 1970

PROGRAM TITLE	NUMBER
SPRING DESIGN - COMPRESSION & EXTENSION SPRINGS	1035-2-ME1
	PAGE

OPERATING PROCEDURE

PRINTER

1. Key PRIME, LOAD PROGRAM, VERIFY PROGRAM: Display should read 1915

2. Depress f(x), PRINTER ON;

3. Input the predetermined values
   Key F, 00,
   K, 01,
   G, 02;

   F labeled by "F"
   K labeled by "K"
   G labeled by "G"

4. Input two of the three variables d, D, N according to:
   Key d, 03,
   D, 04,
   N, 05;

   d labeled by "D"
   D labeled by "M"
   N labeled by "C"

5. To calculate d and S,
   Key 06;
   READ: d labeled by "D"
   S labeled by "Z"

6. To calculate N and S,
   Key 07;
   READ: N labeled by "C"
   S labeled by "Z"

7. To calculate D and S,
   Key 08;
   READ: D labeled by "M"
   S labeled by "Z"

DISPLAY

1. Key PRIME, LOAD PROGRAM, VERIFY PROGRAM: Display should read 1893

2. Depress f(x);

3. Input the predetermined values.
   Key F, 00,
   K, 01,
   G, 02;

4. Input two of the three variables d, D, N according to:
   Key d, 03,
   D, 04,
   N, 05;

5. To calculate d and S,
   Key 06;
   READ: d, GO
   S

6. To calculate N and S,
   Key 07;
   READ: N, GO
   S

7. To calculate D and S,
   Key 08;
   READ: D, GO
   S

© Wang Laboratories, Inc., 1970

PROGRAM TITLE	NUMBER
SPRING DESIGN - COMPRESSION & EXTENSION SPRINGS	1035-2- ME1
	PAGE

EXAMPLE: We wish to design a spring which will compress 1/4" with a 5 lb. load. It must be able to fit over a 1/2" pin, therefore, the maximum load will be 10 lbs.
Assume the wire has a modulus of rigidity $G = 1.15 \times 10^7$ psi. Thus,

K = 20 lb/in
D = .625" to allow for suitable clearance
N = 10 (reasonable number of coils)
F = 10 lbs
$G = 1.15 \times 10^7$ psi

1. Key PRIME, LOAD PROGRAM, VERIFY PROGRAM: Display should read 1915

2. Depress f(x), PRINTER ON;

3. Key 1 0, 00,
   2 0, 01,
   1 . 1 5 SET EXP 7, 02;

4. We know D and N,
   Key . 6 2 5, 04,
   1 0, 05;

5. Key 06;
   READ:

```
      10.000          L
    20.0000           K
1.150000000+07        G
      .6250           M
    10.0000           C

      .0763           D
37955.0100            Z
```

We have determined that the wire diameter meeting our requirements is 0763". However, this diameter may not be standard. Therefore, we must check the tables for the garage wire nearest to .0763". It turns out to be 14 garage wire (d = .0736").

1. Key PRIME, LOAD PROGRAM, VERIFY PROGRAM: Display should read 1893

2. Depress f(x);

3. Key 1 0, 00,
   2 0, 01,
   1 . 1 5 SET EXP 7, 02;

4. We know D and N,
   Key . 6 2 5, 04,
   1 0, 05;

5. Key 06;
   READ: .0763423542, GO
   37955.01008

© Wang Laboratories, Inc., 1970

Now, with F, K and G remaining the same, we perform step 4 again:

Key d = .0736, 03,
D = .625, 04;

and since we now wish to calculate N and S, we perform step 6 instead of step 5,

Key 07;
READ: N = 8.638713340, GO
S = 42270.11546

.0736	D
.6250	M
8.6367	C
42270.1154	Z

© Wang Laboratories, Inc., 1970

520/600 SERIES PROGRAM DESCRIPTION

TITLE	NO.
STRESS AND STRAIN FROM A 45° STRAIN ROSETTE	1036-2-ME1
	EQUIPMENT: 520-2/600-2

REGISTERS	MARKS	DATE
00-11, 14,15	1000 - 1005	MARCH 26, 1971
		PROGRAMMER: James J. Gibson

BLOCK	VERIFY NO. – PRINT	NO. OF STEPS – PRINT	VERIFY NO. – DISPLAY	NO. OF STEPS – DISPLAY
37	1989	142	1934	142

PROGRAM DESCRIPTION:

This program calculates maximum and minimum stress and strain, maximum shearing stress and strain and the angle between the ε axis and the principal strain axis.

Expressing the principal strains in terms of ε_a, ε_b, and ε_c as:

$$\varepsilon_{max}, \varepsilon_{min} = 1/2\,(\varepsilon_a + \varepsilon_c) \pm 1/2 \sqrt{(\varepsilon_a - \varepsilon_c)^2 + \left[2\varepsilon_b - (\varepsilon_a + \varepsilon_c)\right]^2}$$

$$\gamma_{max} = \sqrt{(\varepsilon_a - \varepsilon_c)^2 + \left[2\varepsilon_b - (\varepsilon_a + \varepsilon_c)\right]^2},$$

we can derive the following equations for maximum and minimum stress, σ_{max} and σ_{min} and for maximum shearing stress, τ_{max}:

$$\sigma_{max} = \frac{E}{1-\mu^2}\,(\varepsilon_{max} + \mu\varepsilon_{min})$$

$$\sigma_{min} = \frac{E}{1-\mu^2}\,(\varepsilon_{min} + \mu\varepsilon_{max})$$

$$\tau_{max} = \frac{E}{2(1+\mu)}\,\gamma_{max}$$

ε = strain (in. per in.)

σ = stress (psi)

© Wang Laboratories, Inc., 1972

Printed in U.S.A.

γ_{max} = maximum shearing strain (radians)

τ_{max} = maximum shearing stress (psi)

The program also calculates the angle, ϕ_p, between the ϵ axis and the principal strain axis.

$$\phi_p = 1/2 \tan^{-1} \left(\frac{2\epsilon_b - (\epsilon_a + \epsilon_c)}{\epsilon_a - \epsilon_c} \right)$$

μ = Poisson's ratio

E = Modulus of elasticity (psi)

REFERENCE: "Elements of Strength of Materials", S. Timoshenko and G. H. MacCullough, D. Van Nostrand Company Inc., New Jersey, 3rd edition.

© Wang Laboratories, Inc., 1970

PROGRAM TITLE	NUMBER
STRESS AND STRAIN FROM A 45° STRAIN ROSETTE	1036-2-ME1
	PAGE

OPERATING PROCEDURE

PRINTER

1. Key PRIME, LOAD PROGRAM, VERIFY PROGRAM: Display should read 1989

2. Depress f(x), PRINTER ON;
(DEG←→RAD switch must be UP)

3. Key μ, 00,
E, 01,
ϵ_a, 02,
ϵ_b, 03,
ϵ_c, 04;

μ labeled by "M"
E labeled by "E"
ϵ_a labeled by "A"
ϵ_b labeled by "B"
ϵ_c labeled by "C"

4. Key 05;

5. READ: ϵ_{max} labeled by "E"
ϵ_{min} labeled by "E"
γ_{max} labeled by "G"
ϕ_p labeled by "D"
σ_{max} labeled by "Z"
σ_{min} labeled by "Z"
τ_{max} labeled by "I"

DISPLAY

1. Key PRIME, LOAD PROGRAM, VERIFY PROGRAM: Display should read 1934

2. Depress f(x);
(DEG←→RAD switch must be UP)

3. Key μ, 00,
E, 01,
ϵ_a, 02,
ϵ_b, 03,
ϵ_c, 04;

4. Key 05;

5. READ: ϵ_{max}, GO,
ϵ_{min}, GO,
γ_{max}, GO,
ϕ_p, GO,
σ_{max}, GO,
σ_{min}, GO,
τ_{max}

© Wang Laboratories, Inc., 1970

PROGRAM TITLE	NUMBER
STRESS AND STRAIN FROM A 45° STRAIN ROSETTE	1036-2-ME1
	PAGE

EXAMPLE: We wish to find maximum and minimum stress and strain, maximum shearing stress and strain and the angle ϕ_p for the following data:

$$\mu = .3$$
$$E = 30 \times 10^{6} \text{ psi}$$
$$\epsilon_a = 670 \times 10^{-6} \text{ in/in}$$
$$\epsilon_b = 330 \times 10^{-6} \text{ in/in}$$
$$\epsilon_c = 150 \times 10^{-6} \text{ in/in}$$

When $\epsilon_{a, b, c}$ are inputted, they are keyed in 10^{-6} units,

i.e., 65×10^{-6} is inputted as 65.

$E = 30 \times 10^{-6}$ is inputted as 30.

1. Key PRIME, LOAD PROGRAM, VERIFY PROGRAM: Display should read 1989

2. Depress f(x), PRINTER ON; (DEG←→RAD switch UP)

3. Key .3, 00,
   30, 01,
   670, 02,
   330, 03,
   150, 04;

```
          .3000
3.000000000 +07    M
6.700000000 -04    E
3.300000000 -04    A
1.500000000 -04    B
                   C
```

4. Key 05;

1. Key PRIME, LOAD PROGRAM, VERIFY PROGRAM: Display should read 1934

2. Depress f(x); (DEG←→RAD switch UP)

3. Key .3, 00,
   30, 01,
   670, 02,
   330, 03,
   150, 04;

4. Key 05;

© Wang Laboratories, Inc., 1970

PROGRAM TITLE	NUMBER
STRESS AND STRAIN FROM A 45° STRAIN ROSETTE	1036-2-ME1
	PAGE

5. READ:

```
6.820294101  -04    E
1.379705398  -04    E
5.440588203  -04    G
    -8.5513         D
2.384903034  +04    Z
1.129382679  +04    Z
6.277601773  +03    I
```

5. READ: .0006820294, GO,
.0001379705, GO,
.0005440588, GO,
-8.551364484, GO,
23849,03034, GO,
11293.82679, GO,
6277.601773

© Wang Laboratories, Inc., 1970

520/600 SERIES PROGRAM DESCRIPTION

TITLE	NO.
PLANETARY - EPICYCLIC GEAR RATIOS	1037-2-ME1
	EQUIPMENT: 520-2/600-2

REGISTERS	MARKS	DATE
14, 15	1000-1007, 1106	March 29, 1971
		PROGRAMMER: James J. Gibson

BLOCK	VERIFY NO. – PRINT	NO. OF STEPS – PRINT	VERIFY NO. – DISPLAY	NO. OF STEPS – DISPLAY
38	2304	178	2327	178

PROGRAM DESCRIPTION

The general form of various planetary gear ratio equations is given using A, B, C, D, etc. The operator must select the equation and letters appropriate to his particular configuration.* In every case, the solution to the problem is initiated by keying A, then selecting the appropriate function key. Then B is keyed followed by GO; C, GO etc. as required.

EQUATION	f(x) KEY	RATIO **
(1) $1 + \frac{A}{B}$	00	1.25
(2) $1 - \frac{A}{B}$	01	.75
(3) $1 + \frac{AB}{CD}$	02	3.0
(4) $1 - \frac{AB}{CD}$	03	-1.0
(5) $\frac{1 + \frac{A}{B}}{1 - \frac{CD}{EF}}$	04	2.5
(6) $\frac{1 + \frac{A}{B}}{1 + \frac{CD}{E}}$	05	.416666
(7) $1 - (A-1)\frac{B}{C}$	06	-3.0
(8) $\cos A + \frac{B}{C}$	07	4.5

*E. Oberg and F. D. Jones, Machinery Handbook, The Industrial Press, N.Y., N.Y.

**Ratios shown for equations 1-7 are derived from the following data: A=2, B=8, C=2, D=4, E=4, F=4. For equation #8, A=60°, B=8, C=2.

© Wang Laboratories, Inc., 1972

Printed in U.S.A.

PROGRAM TITLE	NUMBER
PLANETARY - EPICYCLIC GEAR RATIO	1037-2-ME1
	PAGE

OPERATING PROCEDURE

PRINTER

1. Key PRIME, LOAD PROGRAM, VERIFY PROGRAM: Display should read 2304
2. Depress f(x), PRINTER ON;
3. Key A, appropriate f(x) key;
   A labeled by "A"
4. Key B, GO;
   B labeled by "B"

   Repeat step 4, replacing B by C, D, E and F as required by the appropriate equation, and
   Key GO after each.
5. READ: gear ratio labeled by "G"

DISPLAY

1. Key PRIME, LOAD PROGRAM, VERIFY PROGRAM: Display should read 2327
2. Depress f(x);
3. Key A, appropriate f(x) key;
4. Key B, GO;

   Repeat step 4, replacing B by C, D, E and F as required by the appropriate equation, and
   Key GO after each.
5. READ: gear ratio

Let's verify two of the ratios listed above for equations 1-8, namely the ratios corresponding to equations 5 and 8 using the specified data.

1. Key PRIME, LOAD PROGRAM, VERIFY PROGRAM: Display should read 2304
2. Depress f(x), PRINTER ON;

For equation 5,

3. Key 2, 04;
4. Key 8, GO,
   2, GO,
   4, GO,
   4, GO,
   4, GO;

1. Key PRIME, LOAD PROGRAM, VERIFY PROGRAM: Display should read 2327
2. Depress f(x);

For equation 5,

3. Key 2, 04;
4. Key 8, GO,
   2, GO,
   4, GO,
   4, GO,
   4, GO;

© Wang Laboratories, Inc., 1970

5. READ:

2.000000	A
8.000000	B
2.000000	C
4.000000	D
4.000000	E
4.000000	F
2.500000	G

For equation 8, return to step 3.

3. Key 6 0, 07;

4. Key 8, GO,
   2, GO;

5. READ:

60.000000	A
8.000000	B
2.000000	C
4.500000	G

5. READ: 2.500000000

For equation 8, return to step 3.

3. Key 6 0, 07;

4. Key 8, GO,
   2, GO;

5. READ: 4.500000000

© Wang Laboratories, Inc., 1970

520/600 SERIES PROGRAM DESCRIPTION

TITLE	NO.
FOUR GEAR TRAIN	1038-2-ME1
	EQUIPMENT: 520-2/600-2
REGISTERS: 00 - 21	MARKS: 0000 - 0005, 1000 - 1009, 1100
	DATE: January, 1972
	PROGRAMMER: James Harmon

BLOCK	VERIFY NO. – PRINT	NO. OF STEPS – PRINT	VERIFY NO. – DISPLAY	NO. OF STEPS – DISPLAY
29	3205	325	2722	273

PROGRAM DESCRIPTION:

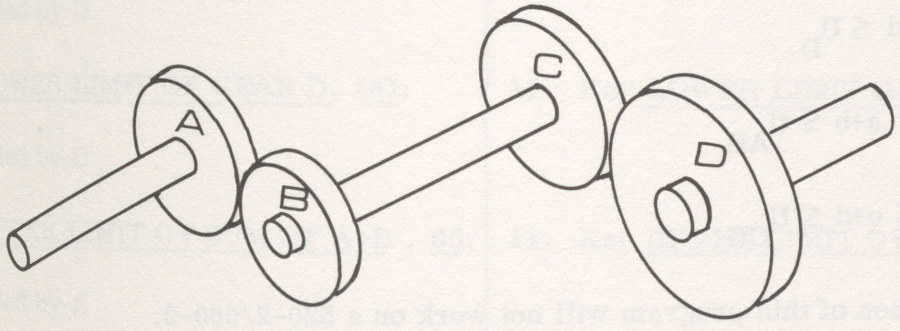

A gear train of four gears, as pictured above, is desired. It is necessary that this gear train possess some fixed ratio within a certain tolerance. Due to the physical limits on size of the gear train, the diameter, and hence the number of teeth, must be within certain limits for each of the four gears and for both pairs.

EXAMPLE: In the example above we will define:

a = number of teeth on gear A.
b = number of teeth on gear B.
c = number of teeth on gear C.
d = number of teeth on gear D.

© Wang Laboratories, Inc., 1972

Printed in U.S.A.

PROGRAM TITLE	NUMBER
FOUR GEAR TRAIN	1038-2-ME1
	PAGE

It is desired to find four integers a, b, c, and d such that

$$\frac{a}{b} \cdot \frac{c}{d} = R \pm r .$$

where R is the desired ratio and r is the allowable tolerance

The following conditions must also be met:

$$L_A \leq a \leq U_A$$

$$L_B \leq b \leq U_B$$

$$L_C \leq c \leq U_C$$

$$L_D \leq d \leq U_D$$

$$L_{AB} \leq a+b \leq U_{AB}$$

$$L_{CD} \leq c+d \leq U_{CD}$$

Note: The print version of this program will not work on a 520-2/600-2.

OPERATING PROCEDURE

PRINTER

1. Key PRIME, LOAD PROGRAM, VERIFY PROGRAM: Display should read 3205;
2. Depress f(x), PRINTER ON;
3. Key UPPER LIMIT OF GEAR A, 01;

   labeled by A
4. Key LOWER LIMIT OF GEAR A, GO;

   labeled by A
5. Key UPPER LIMIT OF GEAR B, 02;

   labeled by B

DISPLAY

1. Key PRIME, LOAD PROGRAM, VERIFY PROGRAM: Display should read 2722;
2. Depress f(x);
3. Key UPPER LIMIT OF GEAR A, 01;
4. Key LOWER LIMIT OF GEAR A, GO;
5. Key UPPER LIMIT OF GEAR B, 02;

© Wang Laboratories, Inc. 1972

6. Key LOWER LIMIT OF GEAR B, GO;

   labeled by B

7. Key UPPER LIMIT OF GEAR C, 03;

   labeled by C

8. Key LOWER LIMIT OF GEAR C, GO;

   labeled by C

9. Key UPPER LIMIT OF GEAR D, 04;

   labeled by D

10. Key LOWER LIMIT OF GEAR D, GO;

    labeled by D

11. Key UPPER LIMIT OF SUM OF A+B , 05;

    labeled by E

12. Key LOWER LIMIT OF SUM OF A+B, GO;

    labeled by E

13. Key UPPER LIMIT OF SUM OF C+D, 06;

    labeled by F

14. Key LOWER LIMIT OF SUM OF C+D, GO;

    labeled by F

15a. Key DESIRED GEAR RATIO
b. Key 07 if absolute tolerance
c. Key 08 if relative tolerance

    Desired ratio labeled by G

16. Key TOLERANCE, GO;
    if absolute labeled by H
    if relative labeled by I

6. Key LOWER LIMIT OF GEAR B, GO;

7. Key UPPER LIMIT OF GEAR C, 03;

8. Key LOWER LIMIT OF GEAR C, GO;

9. Key UPPER LIMIT OF GEAR D, 04;

10. Key LOWER LIMIT OF GEAR D, GO;

11. Key UPPER LIMIT OF SUM OF A+B, 05;

12. Key LOWER LIMIT OF SUM OF A+B, GO;

13. Key UPPER LIMIT OF SUM OF C+D, 06;

14. Key LOWER LIMIT OF SUM OF C+D, GO;

15. a. Key DESIRED GEAR RATIO;
    b. Key 07 if absolute tolerance
    c. Key 08 if relative tolerance

16. Key TOLERANCE, GO;

© Wang Laboratories, Inc. 1972

PROGRAM TITLE	NUMBER
FOUR GEAR TRAIN	1038-2-ME1
	PAGE

17. Key 00;

Program now starts execution, if there is no solution it will stop with a clear display, otherwise read:

18. tooth number for A
labeled by A

tooth number for B
labeled by B

tooth number for C
labeled by C

tooth number for D
labeled by D

Ratio
labeled by X

Error
labeled by E

The program will continue printing in the above manner until there are no more solutions, it may be stopped at any time by either keying Prime or Step.

17. Key 00;

Program will now start execution, if there is no solution it will stop with a clear display, otherwise read:

18. tooth number for A GO

tooth number for B GO

tooth number for C GO

tooth number for D GO

Ratio GO

Error

If you wish to see if there are more solutions, Key GO and start reading as in step 18. Program will stop with a clear display when there are no more solutions, it may be stopped at any time by either keying Prime or Step.

EXAMPLE:

It is desired to produce a gear ratio of .3429 ± .00001 with the following restrictions:

GEAR	UPPER LIMIT	LOWER LIMIT
A	50	35
B	80	60
C	35	25
D	55	40
SUM		
A+B	115	90
B+C	90	70

© Wang Laboratories, Inc. 1972

PROGRAM TITLE

FOUR GEAR TRAIN

NUMBER 1038-2-ME1

PAGE

PRINTER

1. Key PRIME, LOAD PROGRAM, VERIFY PROGRAM: Display should read 3205;
2. Derpess f(x), PRINTER ON;
3. Key 5 0 01;
4. Key 3 5 GO;
5. Key 8 0 02;
6. Key 6 0 GO;
7. Key 3 5 03;
8. Key 2 5 GO;
9. Key 5 5 04;
10. Key 4 0 GO;
11. Key 1 1 5 05;
12. Key 9 0 GO;
13. Key 9 0 06;
14. Key 7 0 GO;
15. Key . 3 4 2 9 07;
16. Key . 0 0 0 0 1 GO;
17. Key 00;

READ:

See Printout on following Page

DISPLAY

1. Key PRIME, LOAD PROGRAM, VERIFY PROGRAM: Display should read 2722;
2. Depress f(x);
3. Key 5 0 01;
4. Key 3 5 GO;
5. Key 8 0 02;
6. Key 6 0 GO;
7. Key 3 5 03;
8. Key 2 5 GO;
9. Key 5 5 04;
10. Key 4 0 GO;
11. Key 1 1 5 05;
12. Key 9 0 GO;
13. Key 9 0 06;
14. Key 7 0 GO;
15. Key . 3 4 2 9 07;
16. Key . 0 0 0 0 1 GO;
17. Key 00;

READ:

	38.00000000 = A	GO
	69.00000000 = B	GO
	33.00000000 = C	GO
	53.00000000 = D	GO
	.3429040196 = R	GO
	.0000040196 - Error	

© Wang Laboratories, Inc. 1972

PROGRAM TITLE	NUMBER
FOUR GEAR TRAIN	1038-2-ME1
	PAGE

```
          50.          A
          35.          A

          80.          B
          60.          B

          35.          C
          25.          C

          55.          D
          40.          D

         115.          E
          90.          E

          90.          F
          70.          F

 .342900000            G
 .000010000            H


          38.          A
          69.          B
          33.          C
          53.          D
 .342904019            X
 .000004019            E


          41.          A
          62.          B
          28.          C
          54.          D
 .342891278            X
-.000008721            E
```

For the next solution, Key GO

READ:
```
41.00000000 = A    GO
62.00000000 = B    GO
28.00000000 = C    GO
54.00000000 = D    GO
.3428912783 = R    GO
-.0000087213 = Error
```

For the next solution, Key GO

Program stops with a clear display indicating that there are no more solutions.

© Wang Laboratories, Inc. 1972

Side 2

This page intentionally left blank

520/600 SERIES PROGRAM DESCRIPTION

TITLE	NO.
FLOW CALCULATION - VENTURI METER	1039-2-CE2
	EQUIPMENT: 520-2/600-2
REGISTERS: 00-04, 14, 15 / MARKS: 1000-1003	DATE: March 20, 1971
	PROGRAMMER: James J. Gibson

BLOCK	VERIFY NO. – PRINT	NO. OF STEPS – PRINT	VERIFY NO. – DISPLAY	NO. OF STEPS – DISPLAY
1	1464	122	1463	122

PROGRAM DESCRIPTION:

This program calculates flow and velocity using Bernoulli's theorem.

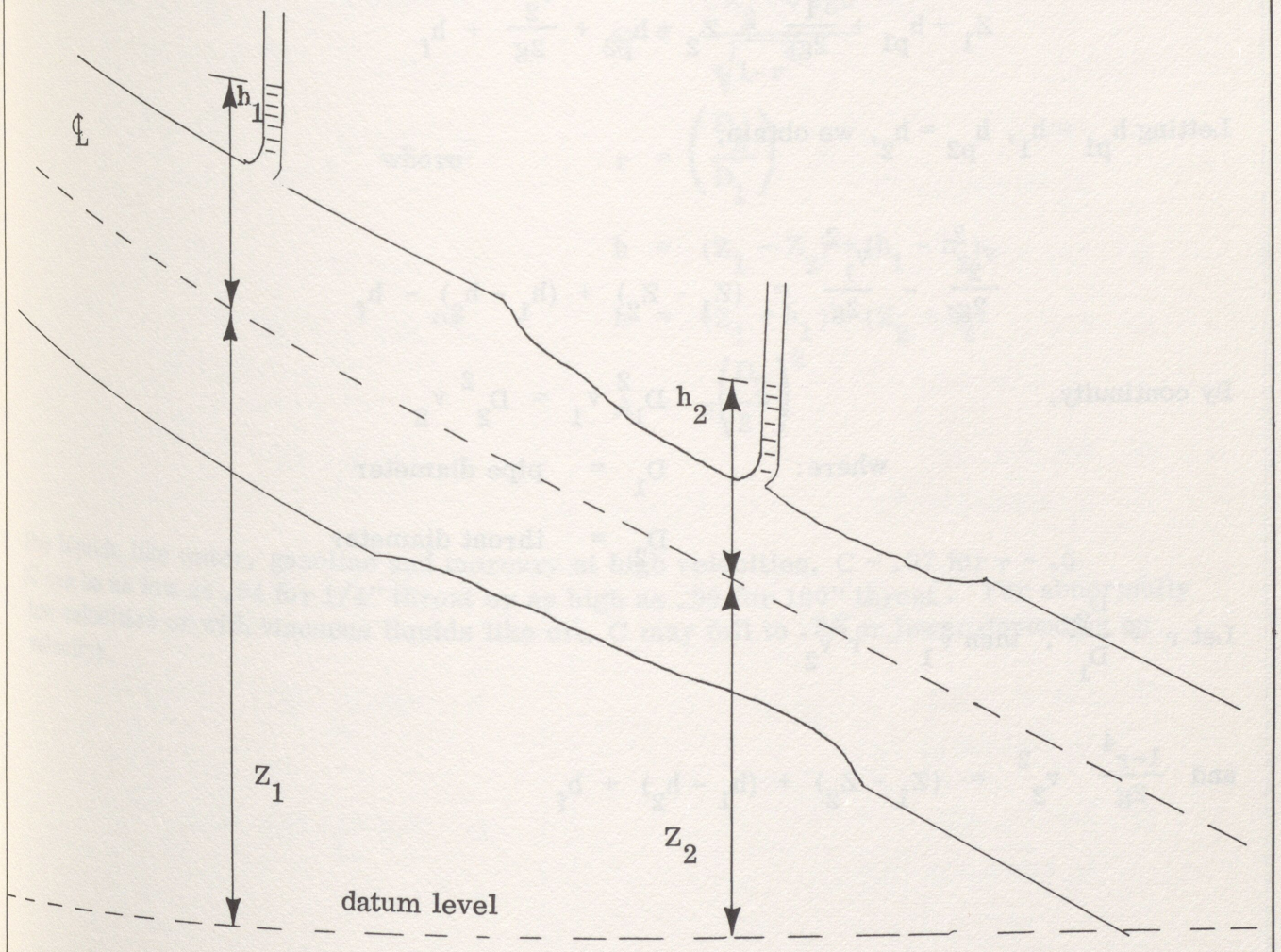

© Wang Laboratories, Inc., 1972

Printed in U.S.A.

PROGRAM TITLE	NUMBER
FLOW CALCULATION - VENTURI METER	1039-2-CE2
	PAGE

Bernoulli's Theorem $H = Z + h_p + h_v$

where:

H = energy head

Z = elevation head

h_p = pressure head

h_v = velocity head = $v^2/2g$

Using above: $H_1 = H_2 + h_f$

where: h_f = all losses between the points 1 and 2.

$$Z_1 + h_{p1} + \frac{v_1^2}{2g} = Z_2 + h_{p2} + \frac{v_2^2}{2g} + h_f$$

Letting $h_{p1} = h_1$, $h_{p2} = h_2$, we obtain,

$$\frac{v_2^2}{2g} - \frac{v_1^2}{2g} = (Z_1 - Z_2) + (h_1 - h_2) - h_f$$

By continuity, $D_1^2 v_1 = D_2^2 v_2$

where:

D_1 = pipe diameter

D_2 = throat diameter

Let $r = \frac{D_2}{D_1}$, then $v_1 = r^2 v_2$

and $\frac{1-r^4}{2g} v_2^2 = (Z_1 - Z_2) + (h_1 - h_2) + h_f$

© Wang Laboratories, Inc., 1970

PROGRAM TITLE

FLOW CALCULATION - VENTURI METER

NUMBER 1039-2- CE2

PAGE

Let $h = (Z_1 - Z_2) + (h_1 - h_2)$ and $h_f = kh$

Then $v_2 = \sqrt{\frac{2gh\,(1-k)}{1-r^4}}$

Usually $\sqrt{1-k}$ is replaced by C, the meter coefficient,

$$v_2 = \sqrt{\frac{2gh}{1-r^4}} \cdot C$$

By continuity, $A_1 v_1 = A_2 v_2 = Q$ (flow)

$$Q = \frac{CA_2\sqrt{2gh}}{\sqrt{1-r^4}}$$

where: $r = \left(\frac{D_2}{D_1}\right)$

$$h = (Z_1 - Z_2) + (h_1 - h_2)$$

or $$h = (Z_1 + h_1) - (Z_2 + h_2)$$

$$A = \pi\left(\frac{D_2}{2}\right)^2$$

For liquids like water, gasoline and mercury at high velocities, C = .97 for r = .5 (C can be as low as .94 for 1/4" throat or as high as .99 for 100" throat. For abnormally low velocities or with viscuous liquids like oil, C may fall to .90 or lower depending on velocity).

© Wang Laboratories, Inc., 1970

PROGRAM TITLE	NUMBER
FLOW CALCULATION - VENTURI METER	1039-2-CE2
	PAGE

There are three ways in which the data Z_1, Z_2, h_1, h_2 can be keyed in:

CASE 1: Z_1, Z_2, h_1, h_2 independently

CASE 2: $\Delta Z = Z_1 - Z_2$ and $\Delta h = h_1 - h_2$

CASE 3: $Z_1 + h_1$ and $Z_2 + h_2$, i.e., the heights of pressure level relative to datum level.

OPERATING PROCEDURE

PRINTER

1. Key PRIME, LOAD PROGRAM, VERIFY PROGRAM: Display should read 1464
2. Depress f(x), PRINTER ON;
3. CASE 1
   a) Key Z_1
      Z_1 labeled by "Z"
   b) Key 00;
   c) Key Z_2, GO;
      Z_2 labeled by "Z"
   d) Key h_1, GO;
      h_1 labeled by "H"
   e) Key h_2, GO;
      h_2 labeled by "H"
   f) Key D_1, GO;
      D_1 labeled by "D"
   g) Key D_2, GO;
      D_2 labeled by "D"

DISPLAY

1. Key PRIME, LOAD PROGRAM, VERIFY PROGRAM: Display should read 1463
2. Depress f(x);
3. CASE 1
   a) Key Z_1
   b) Key 00;
   c) Key Z_2, GO;
   d) Key h_1, GO;
   e) Key h_2, GO;
   f) Key D_1, GO;
   g) Key D_2, GO;

© Wang Laboratories, Inc., 1970

h) Key C, GO;
C labeled by "C"
READ: v_2 labeled by "I"
Q labeled by "F"
v_1 labeled by "L"

CASE 2

a) Key ΔZ
ΔZ labeled by "Z"

b) Key 01;

c) Key Δh, GO;

d) Key D_1, GO
D_1 labeled by "D"

e) Key D_2, GO;
D_2 labeled by "D"

f) Key C, GO;
C labeled by "C"
READ: v_2 labeled by "I"
Q labeled by "F"
v_1 labeled by "L"

CASE 3

a) Key $Z_1 + h_1$
$Z_1 + h_1$ labeled by "Z"

b) Key 02;

c) Key $Z_2 + h_2$, GO;
$Z_2 + h_2$ labeled by "Z"

h) Key C, GO;

READ: v_2, GO
Q, GO
v_1

CASE 2

a) Key ΔZ

b) Key 01;

c) Key Δh, GO;

d) Key D_1, GO;

e) Key D_2, GO;

f) Key C, GO;

READ: v_2, GO
Q, GO
v_1

CASE 3

a) Key $Z_1 + h_1$

b) Key 02;

c) Key $Z_2 + h_2$, GO;

© Wang Laboratories, Inc., 1970

d) Key D_1, GO;
D_1 labeled by "D"

e) Key D_2, GO;
D_2 labeled by "D"

f) Key C, GO;
C labeled by "C"

READ: v_2 labeled by "I"
Q labeled by "F"
v_1 labeled by "L"

d) Key D_1, GO;

e) Key D_2, GO;

f) Key C, GO;

READ: v_2, GO
Q, GO
v_1

EXAMPLE: Using the three cases mentioned above, find v_1, v_2 and Q for the following data:

$Z_1 = 50$ in.

$Z_2 = 40$ in.

$h_1 = 20$ in.

$h_2 = 20$ in.

$D_1 = 20$ in.

$D_2 = 15$ in.

$C = .94$

© Wang Laboratories, Inc., 1970

PROGRAM TITLE	NUMBER
FLOW CALCULATION - VENTURI METER	1039-2-CE2
	PAGE

OPERATING PROCEDURE

1. Key PRIME, LOAD PROGRAM, VERIFY PROGRAM: Display should read 1464

2. Depress f(x), PRINTER ON;

3. CASE 1

   a) Key 5 0;
   b) Key 00;
   c) Key 4 0, GO;
   d) Key 4 0, GO;
   e) Key 2 0, GO;
   f) Key 2 0, GO;
   g) Key 1 5, GO;
   h) Key . 9 4, GO;

   READ:

```
   50.00000   Z
   40.00000   Z
   40.00000   H
   20.00000   H
    20.0000   D
    15.0000   D
       .940   C

14.38099062   I
17.64813066   F

 8.08930722   L
```

   CASE 2

   a) Key 1 0;
   b) Key 01;
   c) Key 2 0, GO;
   d) Key 2 0, GO;
   e) Key 1 5, GO;
   f) Key . 9 4, GO

1. Key PRIME, LOAD PROGRAM, VERIFY PROGRAM: Display should read 1463

2. Depress f(x);

3. CASE 1

   a) Key 5 0;
   b) Key 00
   c) Key 4 0, GO
   d) Key 4 0, GO
   e) Key 2 0, GO;
   f) Key 2 0, GO;
   g) Key 1 5, GO;
   h) Key . 9 4, GO;

   READ: 14.38099062, GO
   17.64813066, GO
   8.089307227

   CASE 2

   a) Key 1 0
   b) Key 01;
   c) Key 2 0, GO;
   d) Key 2 0, GO;
   e) Key 1 5, GO;
   f) Key . 9 4, GO;

© Wang Laboratories, Inc., 1970

PROGRAM TITLE	NUMBER
FLOW CALCULATION - VENTURI METER	1039-2-CE2
	PAGE

READ:

10.00000	Z
20.00000	H
20.0000	G
15.0000	D
.940	C
14.38099062	I
17.64813066	F
8.08930722	L

CASE 3

a) Key 9 0;
b) Key 02;
c) Key 6 0, GO;
d) Key 2 0, GO;
e) Key 1 5, GO;
f) Key . 9 4, GO;
READ:

90.00000	Z
60.00000	Z
20.0000	G
15.0000	D
.940	C
14.38099062	I
17.64813066	F
8.08930722	L

READ: 14.38099062, GO
17.64813066, GO
8.089307227

CASE 3

a) Key 9 0;
b) Key 02;
c) Key 6 0, GO;
d) Key 2 0, GO;
e) Key 1 5, GO;
f) Key . 9 4, GO;
READ: 14.38099062, GO
17.64813066, GO
8.089307227

© Wang Laboratories, Inc., 1970

If you wish to use the same Z_1, Z_2, h_1 and h_2 but different D_1, D_2 or C,

Key 03;

Key D_1, GO,
D_2, GO
C, GO;

After performing any of the 3 cases in the example let's see the effects of changing D_1, D_2 and C to 20 in., 12 in. and .96 respectively.

Key 03;
Key 20, GO,
12, GO,
.96, GO;
READ:

20.0000 D
12.0000 D
.960 C

13.01582746 I
10.22260698 F

4.685697888 L

Key 03;

Key D_1, GO,
D_2, GO,
C, GO;

After performing any of the 3 cases in the example let's see the effects of changing D_1, D_2 and C to 20 in., 12 in. and .96 respectively.

Key 03;
Key 20, GO,
12, GO,
.96, GO;
READ: 13.01582746, GO
10.22260698, GO
4.685697888

© Wang Laboratories, Inc., 1970

520/600 SERIES PROGRAM DESCRIPTION

TITLE	NO.
CHEZY-MANNING EQUATION	1040-2-CE2
	EQUIPMENT: 520-2/600-2

REGISTERS	MARKS	DATE
01-07, 14, 15	1000-1002, 1100	March 22, 1971
		PROGRAMMER: James J. Gibson

BLOCK	VERIFY NO. – PRINT	NO. OF STEPS – PRINT	VERIFY NO. – DISPLAY	NO. OF STEPS – DISPLAY
2	1663	126	1632	126

PROGRAM DESCRIPTION

The flow of an open channel with any designated flow depth in a circular container, (pipe, etc.) with any cross-sectional area is given by the Chezy-Manning equation:

(1) $$Q = \frac{1.49\ AR^{2/3}\ S^{1/2}}{n}$$

where:

Q = flow (in ft.^{3})

A = cross-sectional area of pipe (in ft.^{2})

R = Hydraulic radius (in ft.)

S = Slope of pipe (in feet/ft.)

n = Roughness coefficient

© Wang Laboratories, Inc., 1972

Printed in U.S.A.

PROGRAM TITLE

CHEZY-MANNING EQUATION

NUMBER 1040-2-CE2

PAGE

DIAGRAM:

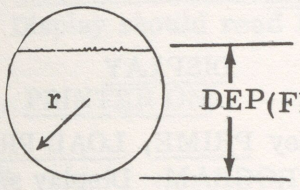

DEP in inches

Hydraulic radius, $R = \frac{\text{area of flow cross-section}}{\text{wetted perimeter}}$

For an open channel with full flow depth,

$$R = \frac{\pi r^2}{2\pi r} = \frac{r}{2} = \frac{D}{4} \quad (D = \text{diameter of container in inches})$$

To get flow, Q, we substitute in equation (1), obtaining,

$$Q = 1.49 \left(\frac{\pi D^2}{4}\right) \left(\frac{D}{4}\right)^{2/3} \frac{S^{1/2}}{n}$$

$$= \frac{1.49\pi}{(4)^{2/3}} \frac{D^{8/3} S^{1/2}}{n} = \frac{.46441\ D^{8/3} S^{1/2}}{n}$$

For an open channel with partial flow depth (as in diagram),

$$R = \frac{\left(DEP - \frac{D}{2}\right) \sqrt{D(DEP) - (DEP)^2} + \frac{D^2}{4} \left[\frac{\pi}{2} + \text{Sin}^{-1} \left(\frac{DEP - D/2}{D/2}\right)\right]}{D \left[\frac{\pi}{2} + \text{Sin}^{-1} \left(\frac{DEP - D/2}{D/2}\right)\right]}$$

To calculate Q, we substitute this R in equation (1).

REFERENCE Elementary Fluid Mechanics, John K. Vennard, Wiley & Sons, Inc. 3rd edition.

© Wang Laboratories, Inc., 1970

PROGRAM TITLE	NUMBER
CHEZY-MANNING EQUATION	1040-2-CE2
	PAGE

OPERATING PROCEDURE

PRINTER

1. Key PRIME, LOAD PROGRAM, VERIFY PROGRAM: Display should read 1663
2. Depress f(x), PRINTER ON;
3. Key D, 00;
   D labeled by "D"
4. Key S, GO;
   S labeled by "I"
5. Key n, GO;
   n labeled by "C"
6. a) If you are at full flow,
      Key 01;
      READ: R labeled by "H"
      Q labeled by "F"

   b) If you are at partial flow,
      Key Depth of Flow (DEP), 02;
      READ: DEP labeled by "Z"
      R labeled by "H"
      Q labeled by "F"

DISPLAY

1. Key PRIME, LOAD PROGRAM, VERIFY PROGRAM: Display should read 1632
2. Depress f(x);
3. Key D, 00;
4. Key S, GO;
5. Key n, GO;
6. a) If you are at full flow,
      Key 01;
      READ: R, GO
      Q

   b) If you are at partial flow,
      Key Depth of Flow (DEP), 02;
      READ:
      R, GO
      Q,

Option: If you wish to compute R for a new DEP with the same D, S, and n,

Key new DEP, 02;

EXAMPLE: Find Q for a full flow in a circular pipe having a diameter of 18" and Q for a partial flow in the same pipe with DEP = 16". The slope of the pipe is .001 ft. and n = .015.

© Wang Laboratories, Inc., 1970

PROGRAM TITLE

CHEZY-MANNING EQUATION

NUMBER

1040-2-CE2

PAGE

1. Key PRIME, LOAD PROGRAM, VERIFY PROGRAM: Display should read 1663

2. Depress f(x), PRINTER ON;

3. Key 1 8, 00;

4. Key . 0 0 1, GO;

5. Key . 0 1 5, GO;

6. a) Since we want full flow,
   Key 01;
   READ:

```
18.00000      D
.00100000     I
.01500000     C

.37500000     H


2.88661094    F
```

   b) Since we also want partial flow at DEP = 16",
   Key 1 6, 02;
   READ:

```
16.00000000   Z

.44946386     H


3.25709625    F
```

1. Key PRIME, LOAD PROGRAM, VERIFY PROGRAM: Display should read 1632

2. Depress f(x);

3. Key 1 8, 00;

4. Key . 0 0 1, GO;

5. Key . 0 1 5, GO;

6. a) Since we want full flow,
   Key 01;
   READ: .3750000000, GO
   2.886610944

   b) Since we also want partial flow at DEP = 16",
   Key 1 6, 02;
   READ: .4494638603, GO
   3.257096259

© Wang Laboratories, Inc., 1970

PROGRAM TITLE	NUMBER
CHEZY-MANNING EQUATION	1040-2-CE2
	PAGE

Let's compute R and Q for DEP = 14.75"
Key 1 4 . 7 5, 02;
READ:

14.75000000 Z

.45641496 H

3.29059166 F

Let's compute R and Q for DEP = 14,75"
Key 1 4 . 7 5, 02
READ: .4564149667, GO
3.290591668

© Wang Laboratories, Inc., 1970

520/600 SERIES PROGRAM DESCRIPTION

TITLE	NO.
RECTANGULAR WEIR	1041-2-CE2
	EQUIPMENT: 520-2/600-2

REGISTERS	MARKS	DATE	PROGRAMMER
01-04, 14, 15	1000-1002, 1100	March 22, 1971	James J. Gibson

BLOCK	VERIFY NO. – PRINT	NO. OF STEPS – PRINT	VERIFY NO. – DISPLAY	NO. OF STEPS – DISPLAY
3	1261	104	1259	104

PROGRAM DESCRIPTION:

This program calculates the rate of flow over a rectangular weir.

$$Q = 2/3\ cb\sqrt{2g}\left[\left(H+\frac{V^2}{2g}\right)^{3/2}-\left(\frac{V^2}{2g}\right)^{3/2}\right]$$

where:

Q = rate of fluid flow (in ft.^{3})

b = length of weir crest (in ft.)

H = head on weir (in ft.)

V = average velocity of fluid approach (in ft./sec.)

c = correction factor

The correction coefficient, c, accounts for the effects of turbulence, surface tension, viscosity, non-uniform velocity, etc.

© Wang Laboratories, Inc., 1972

Printed in U.S.A.

PROGRAM TITLE	NUMBER
RECTANGULAR WEIR	1041-2-CE2
	PAGE

The operator has the option to enter c as data or to calculate it by Rehbock's equation:

$$c = .605 + .08\ H/p + \frac{1}{305H}$$

where p = weir height

Diagram of a standard rectangular weir:

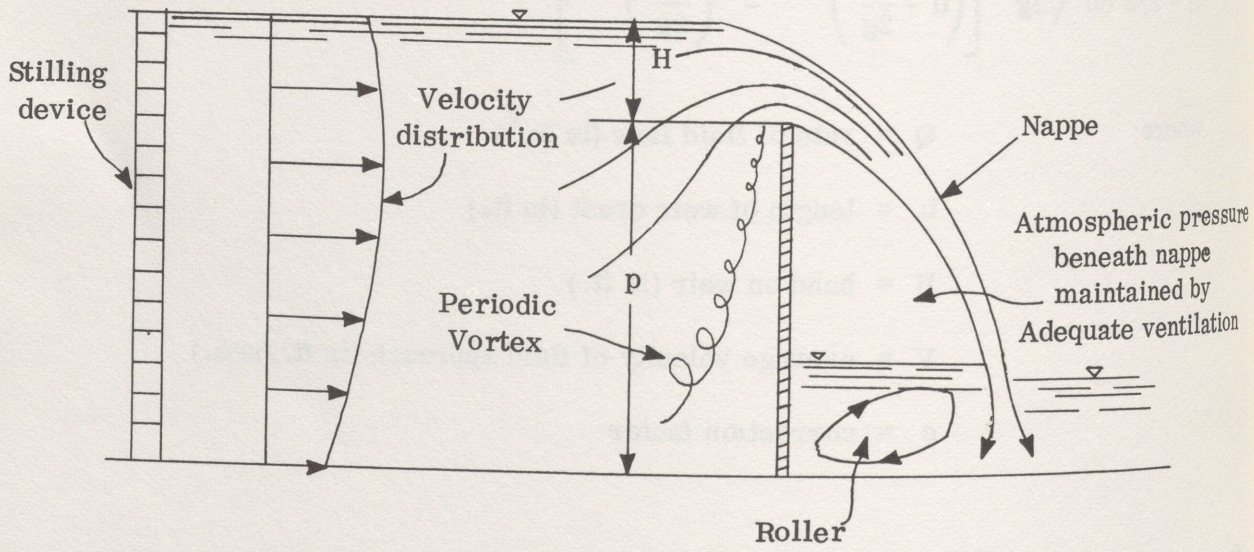

Reference: Elementary Fluid Mechanics - 3rd Edition
John K. Vennard
John Wiley & Sons, Inc.

© Wang Laboratories, Inc., 1970

PROGRAM TITLE	NUMBER
RECTANGULAR WEIR	1041-2-CE2
	PAGE

OPERATING PROCEDURE

PRINTER

1. Key PRIME, LOAD PROGRAM, VERIFY PROGRAM: Display should read 1261
2. Depress f(x), PRINTER ON;
3. Key H, 00;
   H labeled by "H"
4. Key V, GO;
   V labeled by "Y"
5. Key b, GO;
   b labeled by "B"
6. a) To enter c as data,
   Key c, 01;
   READ: c labeled by "C"
   Q labeled by "F"

   b) To calculate c,
   Key p, 02;
   READ: p labeled by "D"
   c labeled by "C"
   Q labeled by "F"

DISPLAY

1. Key PRIME, LOAD PROGRAM, VERIFY PROGRAM: Display should read 1259
2. Depress f(x);
3. Key H, 00;
4. Key V, GO;
5. Key b, GO;
6. a) To enter c as data,
   Key c, 01;
   READ: Q

   b) To calculate c,
   Key p, 02;
   READ: c, GO
   Q

EXAMPLE 1: With c to be entered as data, find Q for the following data:

H = 1 ft.
V = 1 ft./sec.
b = 3 ft.
c = .6

PRINTER

1. Key PRIME, LOAD PROGRAM, VERIFY PROGRAM: Display should read 1261
2. Depress f(x), PRINTER ON;
3. Key 1, 00;

DISPLAY

1. Key PRIME, LOAD PROGRAM, VERIFY PROGRAM: Display should read 1259
2. Depress f(x);
3. Key 1, 00;

© Wang Laboratories, Inc., 1970

4. Key 1, GO;

5. Key 3, GO;

6. a) Key . 6, 01;
READ:

1.00000	H
1.00000	Y
3.00000	B
.600000	C
9.83648837	F

4. Key 1, GO;

5. Key 3, GO;

6. a) Key . 6, 01;
READ: 9.836488373

EXAMPLE 2: With c to be calculated, find Q for the following data:

H = 2 ft.
V = 1 ft./sec.
b = 6 ft.
p = 6.85 ft.

1. Key PRIME, LOAD PROGRAM, VERIFY PROGRAM: Display should read 1261

2. Depress f(x), PRINTER ON;

3. Key 2, 00;

4. Key 1, GO;

5. Key 6, GO;

6. b) Key 6 . 8 5, 02;
READ:

2.00000	H
1.00000	Y
6.00000	B
6.85000	D
.62999	C
57.82702793	F

1. Key PRIME, LOAD PROGRAM, VERIFY PROGRAM: Display should read 1259

2. Depress f(x);

3. Key 2, 00;

4. Key 1, GO;

5. Key 6, GO;

6. b) Key 6 . 8 5, 02;
READ: .6299970084, GO
57.82702793

© Wang Laboratories, Inc., 1970

520/600 SERIES PROGRAM DESCRIPTION

TITLE	NO.
FLOW IN PIPE	1042-2-CE2
	EQUIPMENT: 520-2/620-2
REGISTERS: 01-06, 08, 09, 10, 14, 15 — MARKS: 1000, 1001, 1100-1102	DATE: March 23, 1971
	PROGRAMMER: James J. Gibson

BLOCK	VERIFY NO. – PRINT	NO. OF STEPS – PRINT	VERIFY NO. – DISPLAY	NO. OF STEPS – DISPLAY
4	1904	153	1875	153

PROGRAM DESCRIPTION:

This program calculates the friction factor and head loss in feet of a fluid in a pipe given roughness coefficient, the coefficient of the fluid, v, the diameter of the pipe and the rate of flow, Q in gal./min.

The friction factor, f, is calculated by the Colebrook equation:

$$\frac{1}{\sqrt{f}} = -2 \log \left(\frac{2.51}{R_e \sqrt{f}} + \frac{12\epsilon}{3.7d} \right)$$

and the head loss, h_f, is given by the Darch-Weisback equation:

$$h_f = f \left(\frac{L}{d} \right) \left(\frac{6V^2}{g} \right)$$

ϵ = roughness coefficient

d = pipe diameter (inches)

L = length of pipe (feet)

V = velocity (ft./sec.)

g = acceleration of gravity (32.2 ft./sec.^{2})

© Wang Laboratories, Inc., 1972

Printed in U.S.A.

R_e is the Reynolds number,

$$R_e = \frac{Vd}{12\nu} = \frac{77Q}{720\pi\,\nu\,d}$$

If the fluid is water, $\nu = 1.40 \times 10^{-5}$ ft.^{2}/sec.

Thus, $$R_e = \frac{77 \times 10^5}{1008\pi}\left(\frac{Q}{d}\right)$$

Reference: Marks Standard Handbook for Mechanical Engineers
Seventh Edition
McGraw-Hill Book Company
1967

OPERATING PROCEDURE

PRINTER

1. Key PRIME, LOAD PROGRAM, VERIFY PROGRAM: Display should read 1904
2. Depress f(x), PRINTER ON;
3. a) If you want to calculate h_f and f for water,
   Key 00;

   b) If you want to calculate h_f and f for any material other than water,
   Key ν, 01;
   ν labeled by "C"
4. Key Q, GO;
   Q labeled by "F"
5. Key L, GO;
   L labeled by "L"

DISPLAY

1. Key PRIME, LOAD PROGRAM, VERIFY PROGRAM: Display should read 1875
2. Depress f(x);
3. a) If you want to calculate h_f and f for water,
   Key 00;
   READ: ν of water
   Key GO;

   b) If you want to calculate h_f and f for any material other than water,
   Key ν, 01;
4. Key Q, GO;
5. Key L, GO;

© Wang Laboratories, Inc., 1970

PROGRAM TITLE	NUMBER
FLOW IN PIPE	1042-2-CE2
	PAGE

6. Key ϵ, GO;
   ϵ labeled by "E"

7. Key d, GO;
   d labeled by "D"

8. READ: R_e labeled by "Z"
   f labeled by "F"
   h_f labeled by "H"

6. Key ϵ, GO;

7. Key d, GO;

8. READ: R_e, GO
   f, GO
   h_f

EXAMPLE: Find the friction factor and head loss of water in a pipe of diameter 10" and length, 500'. Rate of flow is 2000 gal./min. and the roughness coefficient is .00085.

1. Key PRIME, LOAD PROGRAM, VERIFY PROGRAM: Display should read 1904

2. Depress f(x), PRINTER ON;

3. a) Since our fluid is water, Key 00;

4. Key 2 0 0 0, GO;

5. Key 5 0 0, GO;

6. Key . 0 0 0 8 5, GO;

7. Key 1 0, GO;

8. READ:

```
1.400000000-05          C

 2000.00000             F
  500.00000             L
  .00035000             E
   10.00000             D

486306.7705             Z

  .02033802             F
12.64775134             H
```

1. Key PRIME, LOAD PROGRAM, VERIFY PROGRAM: Display should read 1875

2. Depress f(x);

3. a) Since our fluid is water,
   Key 00;
   READ: .0000140000,
   Key GO;

4. Key 2 0 0 0, GO;

5. Key 5 0 0, GO;

6. Key . 0 0 0 8 5, GO;

7. Key 1 0, GO;

8. READ: 486306.7705, GO
   .0203380232, GO
   12.64775134

© Wang Laboratories, Inc., 1970

520/600 SERIES PROGRAM DESCRIPTION

TITLE	NO.
PANHANDLE FORMULA	1043-2-CE2
	EQUIPMENT: 520-2/600-2

REGISTERS	MARKS	DATE	PROGRAMMER
00-05, 14, 15	1000 - 1007	March 23, 1971	James J. Gibson

BLOCK	VERIFY NO. – PRINT	NO. OF STEPS – PRINT	VERIFY NO. – DISPLAY	NO. OF STEPS – DISPLAY
5	2153	175	2150	175

PROGRAM DESCRIPTION

The program will solve the panhandle equation for one of three variables, Q, p_1, p_2, when the remaining two are known.

$$Q = .0013678 \left(\frac{p_1^2 - p_2^2}{L} \right)^{.51} D^{2.53}$$

where:

Q = flow in million cubic feet per day (MMCFD)

p_1 = upstream pressure (PSIA)

p_2 = downstream pressure (PSIA)

L = length of pipe (miles)

D = inside pipe diameter (inches)

© Wang Laboratories, Inc., 1972

Printed in U.S.A.

PROGRAM TITLE	NUMBER
PANHANDLE FORMULA	1043-2-CE2
	PAGE

OPERATING PROCEDURE

PRINTER

1. Key PRIME, LOAD PROGRAM, VERIFY PROGRAM: Display should read 2153

2. Depress f(x), PRINTER ON;

3. Key p_1, 00,
   p_2, 01,
   L, 02,
   D, 03,
   Q, 04;

   p_1 labeled by "A"
   p_2 labeled by "B"
   L labeled by "L"
   D labeled by "D"
   Q labeled by "F"

   Note: L and D are always keyed in, but only two of the variables, Q, p_1 or p_2 are inputted.

4. Assuming p_1 and p_2 are known, to find Q,
   Key 05;
   READ: Q labeled by "F"

5. Assuming p_2 and Q are known, to find p_1,
   Key 06;
   READ: p_1 labeled by "A"

6. Assuming p_1 and Q are known, to find p_2,
   Key 07;
   READ: p_2 labeled by "B"

DISPLAY

1. Key PRIME, LOAD PROGRAM, VERIFY PROGRAM: Display should read 2150

2. Depress f(x);

3. Key p_1, 00,
   p_2, 01
   L, 02,
   D, 03,
   Q, 04;

   Note: L and D are always keyed in, but only two of the variables, Q, p_1 or p_2 are inputted.

4. Assuming p_1 and p_2 are known, to find Q,
   Key 05;
   READ: Q

5. Assuming p_2 and Q are known, to find p_1,
   Key 06;
   READ: p_1

6. Assuming p_1 and Q are known, to find p_2,
   Key 07;
   READ: p_2

© Wang Laboratories, Inc., 1970

PROGRAM TITLE	NUMBER
PANHANDLE FORMULA	1043-2-CE2
	PAGE

EXAMPLE: Solve the Panhandle equation for each of the three variables Q, p_1, and p_2 when L = 125 miles and D = 29.3 inches. Use the following data: Q = 492.5 MMCFD, p_1 = 999.98 PSIA and p_2 = 700 PSIA, as required by the program for the particular variable being solved, i.e., to find Q use only p_1 and p_2 and then compare the calculated Q with the given Q.

1. Key PRIME, LOAD PROGRAM, VERIFY PROGRAM: Display should read 2153

2. Depress f(x), PRINTER ON

3. Key 999.98, 00,
   700, 01,
   125, 02,
   29.3, 03,
   492.5, 04;

```
999.98000          A
700.00000          B
125.00000          L
 29.30000          D
492.50000          F
```

4. Key 05;
   READ:

```
492.49515          F
```

5. Key 06;
   READ:

```
999.98493          A
```

6. Key 07;
   READ:

```
699.99299          B
```

1. Key PRIME, LOAD PROGRAM, VERIFY PROGRAM: Display should read 2150

2. Depress f(x);

3. Key 999.98, 00,
   700, 01,
   125, 02,
   29.3, 03,
   492.5, 04;

4. Key 05;
   READ: 492.4951501

5. Key 06;
   READ: 999.9849359

6. Key 07;
   READ: 699.9929920

Note the excellent agreement of calculated data with input data.

© Wang Laboratories, Inc., 1970

520/600 SERIES PROGRAM DESCRIPTION

TITLE	NO.
HARDY-CROSS BALANCING OF A PIPE NETWORK	1044-2-CE2
	EQUIPMENT: 520-2/600-2
REGISTERS: 00-07, 09, 14, 15	MARKS: 1000-1004, 1100-1103
	DATE: February 27, 1970
	PROGRAMMER: R. D. Hawkins

BLOCK	VERIFY NO. – PRINT	NO. OF STEPS – PRINT	VERIFY NO. – DISPLAY	NO. OF STEPS – DISPLAY
6	2549	210	2560	210

PROGRAM DESCRIPTION:

This program balances a pipe network with loops, having any number of pipes, using the Hazen-Williams formula and the HARDY-CROSS technique given only pipe size and flow.

The problem of determining the amount of water which flows through a network of pipes is often encountered in designing pipe networks for a city's water supply. We wish to balance the network so that the head loss between two points is equal regardless of the path we take between the points. The Hardy-Cross method of balancing a network of pipes hydraulically, consists of a series of trial and error approximations by which systematic corrections are made to an initial set of assumed flows in the pipes.

This program is based on the Hazen-Williams formula:

$V = 0.550\ C\ D^{.63}\ S^{.54}$, where "V" is the velocity of the fluid in feet per second, "D" is the diameter of the pipe in feet, "S" is the slope of the energy gradient, and "C" is an empirical constant that varies with the roughness and the diameter of the pipe. From this formula and the relationships:

$S = h/L$, where "h" is the head loss in feet and "L" is the length of the pipe in feet; and

$V = 4Q/\pi D^2$, where "Q" is the flow in cubic feet per second, we can derive $H=KQ^{1.85}$, where

$$K = L\left(\frac{1}{0.279\ C\ D^{2.63}}\right)^{\frac{1}{.54}}$$ with "Q" now expressed in million gallons per day. These two relationships are used in this program to calculate the head loss of a pipe.

Reference: Water Supply and Sewerage, E. W. Steel, McGraw-Hill, N. Y., New York 1960 4th edition.

© Wang Laboratories, Inc., 1972

Printed in U.S.A.

PROGRAM TITLE	NUMBER
HARDY-CROSS BALANCING OF A PIPE NETWORK	1044-2-CE2
	PAGE

Generally, we know the input and the output flow of the network; and we wish to determine the actual flow in each pipe. We must estimate the flow (Q_0) for each pipe in the network and guess as to the direction of flow for each. Clockwise flow is given a (+) sign; counterclockwise flow, a (-) sign. A correction factor (Δq) is generated for each loop. A pipe common to two loops is computed in each loop. This common pipe will receive correction factors (Δq) from both loops. The correction factor (Δq) for a loop is:

$$\Delta q = - \frac{\Sigma H}{1.85 \, \Sigma {}^{H}/_{Q}}$$

where "H" represents head loss and "Q" represents the assumed flow in each pipe. The correction factor (Δq) is added to each "Q" in the loop. When "Δ q" is the second correction factor for a common pipe and there is no sign change on "Q", it is added; if there is a sign change on "Q", change the sign of "Δ q" and add it to "Q". After all the correction flows are found, these new flow values are used in the same manner as before to generate a closer approximation of the true flow rates and head losses occurring in the network. This process is repeated until the correction factors become negligible.

This program is set up to work with one loop of a network at a time and can handle any number of pipes in one loop. Consequently, it may be used to balance any network of pipes. Any measure may be used for "Q" because you key in the conversion factor from that measure to "million gallons per day."

OPERATING PROCEDURE

PRINTER

1. Key PRIME, LOAD PROGRAM, VERIFY PROGRAM: Display should read 2549

2. Depress f(x), PRINTER ON;

3. A. Initialization for entire network. (first loop).
   Key CF, 00;
   CF is the conversion factor from your unit of measure for "Q" to million gallons per day, i.e.,
   CF = .00144 if you are using gallons per minute.
   CF = .64636 if you are using cubic feet per second.
   CF = 1.0 if you are using million gallons per day.

DISPLAY

1. Key PRIME, LOAD PROGRAM, VERIFY PROGRAM: Display should read 2560

2. Depress f(x);

3. A. Initialization for entire network. (first loop).
   Key CF, 00;
   CF is the conversion factor from your unit of measure for "Q" to million gallons per day, i.e.,
   CF = .00144 if you are using gallons per minute.
   CF = .64636 if you are using cubic feet per second.
   CF = 1.0 if you are using million gallons per day.

© Wang Laboratories, Inc., 1970

B. Initialization for all loops except the first loop.
Key 01;
(3B not necessary if 3A applies. Use 3B if there has been no change in CF from last loop to this loop)

4. Input variables for loop.

A. READ: C from last pipe
(C = 0 for first pipe of first loop).
If you wish to change C,
Key C, GO;
C labeled by "C"
If you wish no change in C,
Key GO;

B. READ: D from last pipe,
(D = 0 for first pipe of first loop).
If you wish to change D,
Key D, GO;
D labeled by "D"
If you wish no change in D,
Key GO;
D labeled by "D"

C. READ: L from last pipe.
(L = 0 for first pipe of first loop).
If you wish to change L,
Key L, GO;
If you wish no change in L,
Key GO;
L labeled by "L"

D. When display is clear,
Key Q_0, GO;
Q_0 labeled by "F"

Repeat steps 4A-4D for all pipes of the same loop, changing C, D, L and Q_0 as required.

B. Initialization for all loops except the first loop.
Key 01;
(3B not necessary if 3A applies. Use 3B if there has been no change in CF from last loop to this loop)

4. Input variables for loop.

A. READ: C from last pipe
(C = 0 for first pipe of first loop).
If you wish to change C,
Key C, GO;

If you wish no change in C,
Key GO;

B. READ: D from last pipe,
(D = 0 for first pipe of first loop).
If you wish to change D,
Key D, GO;

If you wish no change in D,
Key GO;

C. READ: L from last pipe.
(L = 0 for first pipe of first loop).
If you wish to change L,
Key L, GO;
If you wish no change in L,
Key GO;

D. When display is clear,
Key Q_0, GO;

Repeat steps 4A-4D for all pipes of the same loop, changing C, D, L and Q_0 as required.

© Wang Laboratories, Inc., 1970

5. When all the pipes in one loop have been keyed in,
   Key 02;
   READ: Δq_1 labeled by "I"

6. A. To get $Q_A = Q_0 + \Delta q_1$,
   Key Q_0, GO;
   READ: Q_A labeled by "F"

   Repeat step 6A for the Q_0 of each pipe in the loop.

   B. If you have Δq_1 and can do the addition, $Q_0 + \Delta q_1$, by hand, record the Q_A values in a table and proceed to step 7.

7. Repeat steps 3B-6 for the rest of the loops in network for pass #1.

8. Make as many passes as are required to obtain the desired tolerance (usually $\Delta q < 50$ gal/min) Remember to take into account the criterion for using pipes which are common to 2 loops.

9. When Step 8 has been successfully completed and we have found the desired flow in each pipe, Q, we can calculate the head loss of each individual pipe of a loop and the sum of the loss for a loop:
   Key 03;
   Key C, D, L and Q according to step 4;
   READ: Q labeled by "F"
   H labeled by "H"
   Key C, D, L and Q for each pipe in a loop according to step 4;

5. When all the pipes in one loop have been keyed in,
   Key 02;
   READ: Δq_1

6. A. To get $Q_A = Q_0 + \Delta q_1$,
   Key Q_0, GO;
   READ: Q_A

   Repeat step 6A for the Q_0 of each pipe in the loop.

   B. If you have Δq_1 and can do the addition, $Q_0 + \Delta q_1$, by hand, record the Q_A values in a table and proceed to step 7.

7. Repeat steps 3B-6 for the rest of the loops in network for pass #1.

8. Make as many passes as are required to obtain the desired tolerance (usually $\Delta q < 50$ gal/min) Remember to take into account the criterion for using pipes which are common to 2 loops.

9. When Step 8 has been successfully completed and we have found the desired flow in each pipe, Q, we can calculate the head loss of each individual pipe of a loop and the sum of the loss for a loop:
   Key 03;
   Key C, D, L and Q according to step 4;
   READ: H
   Key GO to find head loss for next pipe.
   Key C, D, L and Q for each pipe in a loop according to step 4.

© Wang Laboratories, Inc., 1970

10. When the head loss of every pipe of a particular loop has been found,
Key 04;
READ: ΣH labeled by "X"

Repeat steps 9 and 10 for each loop in the network.

10. When the head loss of every pipe of a particular loop has been found,
Key GO;
Key 04;
READ: ΣH

Repeat steps 9 and 10 for each loop in the network.

© Wang Laboratories, Inc., 1970

PROGRAM TITLE	NUMBER
HARDY-CROSS BALANCING OF A PIPE NETWORK	1044-2-CE2
	PAGE

EXAMPLE: Assume the following sample network of pipes with C = 100.

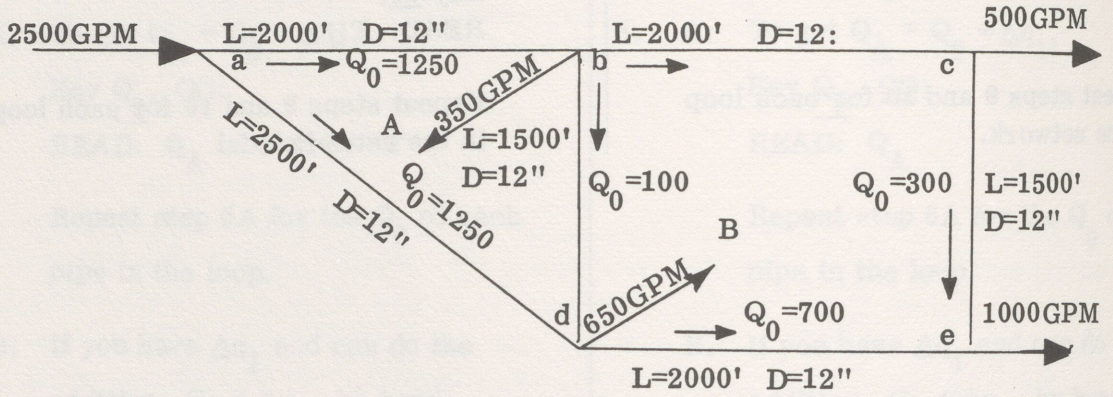

This network can be represented in tabular form with our assumed flows (Q_0) and blank columns for output.

Loop	Pipe	i	C	D"	L'	Q_0	Δq_1	Q_A	Δq_2	Q_1	Δq_1	Q_A	Δq_2	Q_2	H
P	ab	1	100	12	2000	+1250									
	bc	2	100	12	2000	+ 800									
	ce	3	100	12	1500	+ 300									
	de	4	100	12	2000	- 700									
	ad	5	100	12	2500	-1250									
															ΣH=
A	ab	1	100	12	2000	+1250									
	bd	2	100	12	1500	+ 100									
	ad	3	100	12	2500	-1250									
															ΣH=
B	bc	1	100	12	2000	+ 800									
	ce	2	100	12	1500	+ 300									
	de	3	100	12	2000	- 700									
	bd	4	100	12	1500	- 100									
															ΣH=

© Wang Laboratories, Inc., 1970

PROGRAM TITLE

HARDY-CROSS BALANCING OF A PIPE NETWORK

NUMBER 1044-2-CE2

PAGE

1. Key PRIME, LOAD PROGRAM, VERIFY PROGRAM: Display should read 2549

2. Depress f(x), PRINTER ON;

3. Key CF = . 0 0 1 4 4, 00;

PASS I, LOOP P

4.1 Input variables for pipe #1, loop P.

A. READ: 0.0
Key C = 1 0 0, GO;

B. READ: 0.0
Key D = 1 2, GO;

C. READ: 0.0
Key L = 2 0 0 0, GO;

D. READ: DISPLAY CLEAR
Key Q_0 = 1 2 5 0, GO;

100.	C
12.	D
2000.	L
1250.	F

4.2 Input variables for pipe #2, loop P.

A. READ: 100
Key GO;

B. READ: 12
Key GO;

C. READ: 2000
Key GO

D. READ: DISPLAY CLEAR
Key 8 0 0, GO;

100.	C
12.	D
2000.	L
800.	F

1. Key PRIME, LOAD PROGRAM, VERIFY PROGRAM: Display should read 2560

2. Depress f(x);

3. Key CF = . 0 0 1 4 4, 00;

PASS I, LOOP P

4.1 Input variables for pipe #1, loop P.

A. READ: 0.0
Key C = 1 0 0, GO;

B. READ: 0.0
Key D = 1 2, GO;

C. READ: 0.0
Key L = 2 0 0 0, GO;

D. READ: DISPLAY CLEAR
Key Q_0 = 1 2 5 0, GO;

4.2 Input variables for pipe #2, loop P.

A. READ: 100
Key GO;

B. READ: 12
Key GO;

C. READ: 2000
Key GO

D. READ: DISPLAY CLEAR
Key 8 0 0, GO;

© Wang Laboratories, Inc., 1970

4.3 Input variables for pipe #3, loop P.

A. READ: 100
Key GO;

B. READ: 12
Key GO;

C. READ: 2000
Key 1 5 0 0, GO;

D. READ: DISPLAY CLEAR
Key 3 0 0, GO;

100.	C
12.	D
1500.	L
300.	F

4.4 Input variables for pipe #4, loop P.

A. READ: 100
Key GO;

B. READ: 12
Key GO;

C. READ: 1500
Key 2 0 0 0, GO;

D. READ: DISPLAY CLEAR
Key 7 0 0, CH SIGN, GO;

100.	C
12.	D
2000.	L
-700.	F

4.5 Input variables for pipe #5, loop P.

A. READ: 100
Key GO;

B. READ: 12
Key GO;

4.3 Input variables for pipe #3, loop P.

A. READ: 100
Key GO;

B. READ: 12
Key GO;

C. READ: 2000
Key 1 5 0 0, GO;

D. READ: DISPLAY CLEAR
Key 3 0 0, GO;

4.4 Input variables for pipe #4, loop P.

A. READ: 100
Key GO;

B. READ: 12
Key GO;

C. READ: 1500
Key 2 0 0 0, GO;

D. READ: DISPLAY CLEAR
Key 7 0 0, CH SIGN, GO;

4.5 Input variables for pipe #5, loop P.

A. READ: 100
Key GO;

B. READ: 12
Key GO;

© Wang Laboratories, Inc., 1970

C. READ: 2000
Key 2 5 0 0, GO;

D. READ: DISPLAY CLEAR
Key 1 2 5 0, CH SIGN, GO;

```
 100.      C
  12.      D
2500.      L
-1250.     F
```

5. To get Δq_1 for loop P.

Key 02;
READ:

```
 18.       I
```

6. To get Q_A for pipe #1, loop P.

Key 1 2 5 0, GO;
READ:

```
1268.      F
```

Repeat step 6 for pipes 2-5 of loop P. keying the appropriate Q_0, GO.

READ:

```
 813.      F
 318.      F
-682.      F
-1232.     F
```

7. To do loops A and B, start at step 3B:
Key 01;
and proceed as in step 4, i.e.,

A. READ: C = 100
Key GO;

B. READ: D = 12
Key GO;
etc for all pipes of each loop.

C. READ: 2000
Key 2 5 0 0, GO;

D. READ: DISPLAY CLEAR
Key 1 2 5 0, CH SIGN, GO;

5. To get Δq_1 for loop P.

Key 02;
READ: 18.00000000

6. To get Q_A for pipe #1, loop P.

Key 1 2 5 0, GO;
READ: 1268.

Repeat step 6 for pipes 2-5 for loop P. keying the appropriate Q_0, GO.

READ:
```
818.0000000
318.0000000
-682.0000000
-1232.000000
```

7. To do loops A and B, start at step 3B:
Key 01;
and proceed as in step 4, i.e.,

A. READ: C = 100
Key GO;

B. READ: D = 12
Key GO;
etc. for all pipes of each loop.

© Wang Laboratories, Inc., 1970

8. Now evaluate Δq_2 according to the prescribed method.

$Q_1 = Q_A + \Delta q_2$

Assuming Q_1 is the Q_0 of the original pass, go through PASS II again starting at step 3B.
Do as many passes as necessary until Δq_1 is within tolerance.

8. Now evaluate Δq_2 according to the prescribed method.

$Q_1 = Q_A + \Delta q_2$

Assuming Q_1 is the Q_0 of the original pass, go through PASS II again starting at step 3B.
Do as many passes as necessary until Δq_1 is within tolerance.

© Wang Laboratories, Inc., 1970

PROGRAM TITLE

HARDY-CROSS BALANCING OF A PIPE NETWORK

NUMBER 1044-2-CE2

PAGE

TABLE AT END OF PASS I.

Loop	Pipe	i	C	D"	L'	Q_0	Δq_1	Q_A	Δq_2	Q_1	Δq_1	Q_A	Δq_2	Q_2	H
P	ab	1	100	12	2000	+1250	+18	+1268	+70	+1338					
	bc	2	100	12	2000	+ 800		+ 818	-59	+759					
	ce	3	100	12	1500	+ 300		+ 318	-59	+259					
	de	4	100	12	2000	- 700		- 682	-59	-741					
	ad	5	100	12	2500	-1250		-1232	+70	-1162					
															ΣH=
A	ab	1	100	12	2000	+1250	+70	+1320	+18	+1338					
	bd	2	100	12	1500	+ 100		+ 170	+59	+229					
	ad	3	100	12	2500	-1250		-1180	+18	-1162					
															ΣH=
B	bc	1	100	12	2000	+ 800	-59	+ 741	+18	+759					
	ce	2	100	12	1500	+ 300		+ 241	+18	+259					
	de	3	100	12	2000	- 700		- 759	+18	-741					
	bd	4	100	12	1500	- 100		- 159	-70	-229					
															ΣH=

Since there is a $|\Delta q_1|$ greater than 50 GPM (the normal tolerance) we need to make a second pass.

© Wang Laboratories, Inc., 1970

PROGRAM TITLE	NUMBER
HARDY-CROSS BALANCING OF A PIPE NETWORK	1044-2-CE2
	PAGE

TABLE AT END OF PASS II.

Loop	Pipe	i	C	D"	L'	Q_0	Δq_1	Q_A	Δq_2	Q_1	Δq_1	Q_A	Δq_2	Q_2	H
P	ab	1	100	12	2000	+1250	+18	+1268	+70	+1338	-18	+1320	-20		
	bc	2	100	12	2000	+ 800		+ 818	-59	+ 759		+ 741	-10		
	ce	3	100	12	1500	+ 300		+ 318	-59	+ 259		+ 241	-10		
	de	4	100	12	2000	- 700		- 682	-59	- 741		- 759	-10		
	ad	5	100	12	2500	-1250		-1232	+70	-1162		-1180	-20		
															$\Sigma H=$
A	ab	1	100	12	2000	+1250	+70	+1320	+18	+1338	-20	+1318	-18		
	bd	2	100	12	1500	+ 100		+ 170	+59	+ 229		+ 209	+10		
	ad	3	100	12	2500	-1250		-1180	+18	-1162		-1182	-18		
															$\Sigma H=$
B	bc	1	100	12	2000	+ 800	-59	+ 741	+18	+ 759	-10	+ 749	-18		
	ce	2	100	12	1500	+ 300		+ 241	+18	+ 259		+ 249	-18		
	de	3	100	12	2000	- 700		- 759	+18	- 741		- 751	-18		
	bd	4	100	12	1500	- 100		- 159	-70	- 229		- 239	+20		

Since there are no Δq_1's greater than 50 GPM, we can finalize the problem by adding the Q_A's to the Δq_2's and recording them in the Q_2 Column. Then using C, D, L, and Q_2 we can calculate the head loss for each pipe using the "Independent Head Loss Calculation Routine."

© Wang Laboratories, Inc., 1970

9. Since we are now at a point where we are within our tolerance of Δq_1, we sum Q_A of PASS II and Δq_2 of PASS II to get Q_2 of each pipe. On the basis of each Q_2, we calculate the head loss for each pipe.
To illustrate the calculation of head loss, we will run through loop P
Key 03;
To get head loss for pipe #1,
READ: 100
Key GO;
READ: 12
Key GO;
READ: 1500
Key 2 0 0 0, GO;
READ: DISPLAY CLEAR
Key 1 3 0 0, GO;
READ:

1300. F
13.41 H

To get head loss for pipe #2,
READ: 100
Key GO;

READ: 12
Key GO;
READ: 2000
Key GO;
READ: DISPLAY CLEAR
Key 7 3 1, GO
READ:

731. F
4.62 H

9. Since we are now at a point where we are within our tolerance of Δq_1, we sum Q_A of PASS II and Δq_2 of PASS II to get Q_2 of each pipe. On the basis of each Q_2, we calculate the head loss for each pipe.
To illustrate the calculation of head loss, we will run through loop P
Key 03;
To get head loss for pipe #1,
READ: 100
Key GO;
READ: 12
Key GO;
READ: 1500
Key 2 0 0 0, GO;
READ: DISPLAY CLEAR
Key 1 3 0 0, GO;
READ: 13.41995275

To get head loss for pipe #2,
Key GO;
READ: 100
Key GO;
READ: 12
Key GO;
READ: 2000
Key GO;
READ: DISPLAY CLEAR
Key 7 3 1, GO
READ: 4.625971284

© Wang Laboratories, Inc., 1970

To get head loss for pipe #3,
READ: 100
Key GO;

READ: 12
Key GO;
READ: 2000
Key 1 5 0 0, GO;
READ: DISPLAY CLEAR
Key 2 3 1, GO;
READ:

231. F
.41 H

To get head loss for pipe #4,
READ: 100
Key GO;

READ: 12
Key GO;
READ: 1500
Key 2 0 0 0;
READ: DISPLAY CLEAR
Key 7 6 9, CH SIGN, GO;
READ:

-769. F
-5.08 H

To get head loss for pipe #5,
READ: 100
Key GO;

READ: 12
Key GO;
READ: 2000
Key 2 5 0 0, GO;
READ: DISPLAY CLEAR
Key 1 2 0 0, CH SIGN, GO;
READ:

-1200. F
-14.46 H

To get head loss for pipe #3,
Key GO;
READ: 100
Key GO;
READ: 12
Key GO;
READ: 2000
Key 1 5 0 0, GO;
READ: DISPLAY CLEAR
Key 2 3 1, GO;
READ: .4118122027

To get head loss for pipe #4,
Key GO;
READ: 100
Key GO;
READ: 12
Key GO;
READ: 1500
Key 2 0 0 0;
READ: DISPLAY CLEAR
Key 7 6 9, CH SIGN, GO;
READ: -5.080652760

To get head loss for pipe #5,
Key GO;
READ: 100
Key GO;
READ: 12
Key GO;
READ: 2000
Key 2 5 0 0, GO;
READ: DISPLAY CLEAR
Key 1 2 0 0, CH SIGN, GO;
READ: -14.46608802

© Wang Laboratories, Inc., 1970

10. To get the sum of head loss for loop P,
Key 04;

READ:

-1.08 X

10. To get the sum of head loss for loop P,
Key GO;
Key 04;
READ: -1.089004539

© Wang Laboratories, Inc., 1970

PROGRAM TITLE	NUMBER
HARDY-CROSS BALANCING OF A PIPE NETWORK	1044-2-CE2
	PAGE

THE BALANCED NETWORK

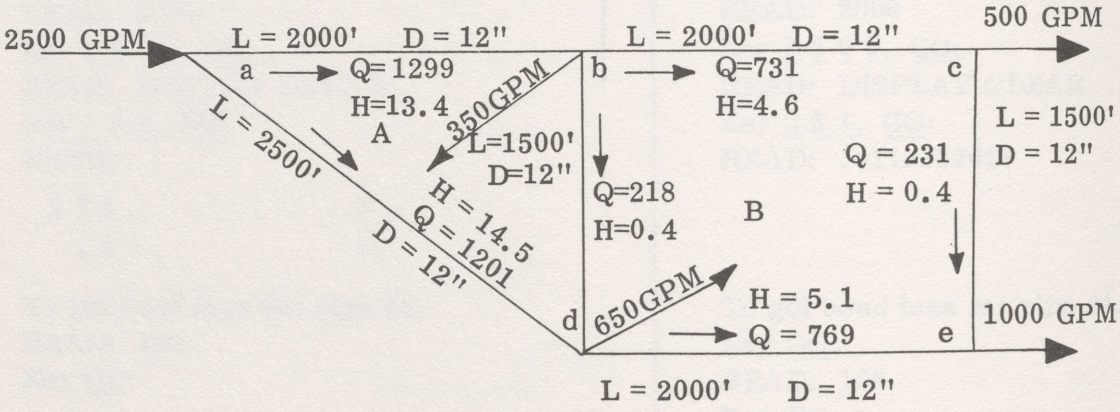

THE TABLE AT END OF PROBLEM

Loop	Pipe	i	C	D"	L'	Q_0	Δq_1	Q_A	Δq_2	Q_1	Δq_1	Q_A	Δq_2	Q_2	H
P	ab	1	100	12	2000	+1250	+18	+1268	+70	+1338	-18	+1320	-20	+1300	+13.41
	bc	2	100	12	2000	+ 800		+ 818	-59	+ 759		+ 741	-10	+ 731	+ 4.62
	ce	3	100	12	1500	+ 300		+ 318	-59	+ 259		+ 241	-10	+ 231	.41
	de	4	100	12	2000	- 700		- 682	-59	- 741		- 759	-10	- 769	- 5.08
	ad	5	100	12	2500	-1250		-1232	+70	-1162		-1180	-20	-1200	-14.46
															ΣH=-1.08
A	ab	1	100	12	2000	+1250	+70	+1320	+18	+1338	-20	+1318	-18	+1300	+13.41
	bd	2	100	12	1500	+ 100		+ 170	+59	+ 229		+ 209	+10	+ 219	.37
	ad	3	100	12	2500	-1250		-1180	+18	-1162		-1182	-18	-1200	-14.46
															ΣH=-.67
B	bc	1	100	12	2000	+ 800	-59	+ 741	+18	+ 759	-10	+ 749	-18	+ 731	+ 4.62
	ce	2	100	12	1500	+ 300		+ 241	+18	+ 259		+ 249	-18	+ 231	+ .41
	de	3	100	12	2000	- 700		- 759	+18	- 741		- 751	-18	- 769	- 5.08
	bd	4	100	12	1500	- 100		- 159	-70	- 229		- 239	+20	- 219	- .37
															ΣH=-.41

© Wang Laboratories, Inc., 1970

520/600 SERIES PROGRAM DESCRIPTION

TITLE	NO.
CANTILEVER BEAM, INTERMEDIATE LOAD AT A POINT	1045-2-CE3
	EQUIPMENT: 520-2/600-2
REGISTERS: 00-07, 14, 15 / MARKS: 1000, 1001, 1100, 1101	DATE: April 9, 1971
	PROGRAMMER: James J. Gibson

BLOCK	VERIFY NO. – PRINT	NO. OF STEPS – PRINT	VERIFY NO. – DISPLAY	NO. OF STEPS – DISPLAY
7	1830	137	1816	137

PROGRAM DESCRIPTION:

This program calculates deflection, Y, maximum deflection and end slope, θ, for a cantilever beam with intermediate load at a point.

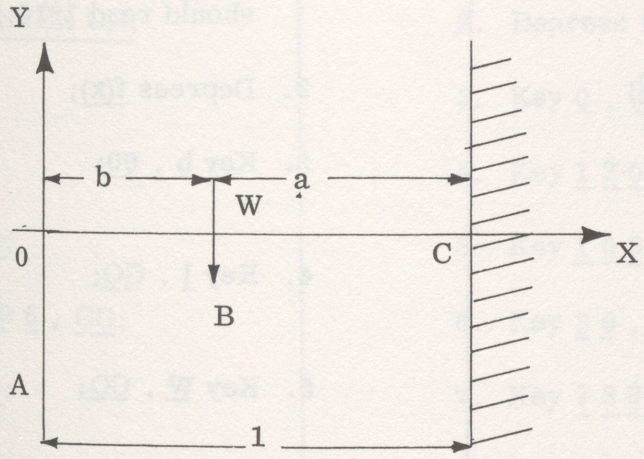

(A to B) $$Y = -\frac{1}{6}\frac{W}{EI}(-a^3 + 3a^2 1 - 3a^2 x) \quad (1)$$

(B to C) $$Y = -\frac{1}{6}\frac{W}{EI}\left[(x-b)^3 - 3a^2(x-b) + 2a^3\right] \quad (2)$$

Max $$Y = -\frac{1}{6}\frac{W}{EI}(3a^2 1 - a^3) \quad (3)$$

$$\theta = \frac{1}{2}\frac{Wa^2}{EI} \text{ (A to B)} \quad (4)$$

© Wang Laboratories, Inc., 1972

Printed in U.S.A.

PROGRAM TITLE	NUMBER
CANTILEVER BEAM - INTERMEDIATE LOAD AT A POINT	1045-2-CE3
	PAGE

Where
Y = deflection (positive when upward) (in inches)
l = length (inches)
W = load (lbs)
I = moment of inertia (inches^4)
E = modulus of elasticity (psi)
θ = end slope in radians ($\tan \theta = \theta$)

Reference: Roark, Raymond J., Formulas Of Stress And Strain, McGraw-Hill, N.Y., N.Y., 4th Ed., 1954.

OPERATING PROCEDURE

PRINTER

1. Key PRIME, LOAD PROGRAM, VERIFY PROGRAM: Display should read 1830;
2. Depress f(x), PRINTER ON;
3. Key b , 00, b labeled by "B" ;
4. Key l , GO, l labeled by "L";
5. Key W , GO W labeled by "F";
6. Key E, GO , E labeled by "E"
7. Key I , GO, I labeled by "I";
8. READ: Max Y labeled by "M", θ labeled by "Z" ;

DISPLAY

1. Key PRIME, LOAD PROGRAM, VERIFY PROGRAM: Display should read 1816;
2. Depress f(x);
3. Key b , 00;
4. Key l , GO;
5. Key W , GO;
6. Key E , GO;
7. Key I , GO;
8. READ: Max Y, GO, θ;

© Wang Laboratories, Inc., 1970

PROGRAM TITLE	NUMBER
CANTILEVER BEAM - INTERMEDIATE LOAD AT A POINT	1045-2-CE3
	PAGE

9. If you wish to find Y at a particular x,

Key x , 01,

READ: x labeled by "X"
Y labeled by "Y"

9. If you wish to find Y at a particular x,

Key x , 01,

READ: Y

EXAMPLE: Find the deflection at the midpoint of a beam 10 ft. long with a load of 10,000 lbs at the end. ($I = 736.4\ in^4$, $E = 30 \times 10^6$ psi)

1. Key PRIME, LOAD PROGRAM, VERIFY PROGRAM: Display should read 1830;
2. Depress f(x), PRINTER ON;
3. Key 0 , 00;
4. Key 1 2 0 , GO;
5. Key 1 0 0 0 0 , GO;
6. Key 3 0 , SET EXP 6 , GO;
7. Key 7 3 6 . 4 , GO;
8. READ:

```
      0.000          B
    120.000          L
  10000.000          F
3.000000000  +07     E
    736.400          I

-.26072786           M
 .00325909           Z
```

9. Key 6 0 , 01,

READ:

```
  60.00000           X
-.08147745           Y
```

1. Key PRIME, LOAD PROGRAM, VERIFY PROGRAM: Display should read 1816;
2. Depress f(x);
3. Key 0 , 00;
4. Key 1 2 0 , GO;
5. Key 1 0 0 0 0 , GO;
6. Key 3 0 , SET EXP 6 , GO;
7. Key 7 3 6 . 4 , GO;
8. READ: -2.607278652, GO,
   .0032590983 ;
9. Key 6 0 , 01,

READ: -.0814774579

© Wang Laboratories, Inc., 1970

520/600 SERIES PROGRAM DESCRIPTION

TITLE	NO.
CANTILEVER BEAM - UNIFORM LOAD	1046-2-CE3
	EQUIPMENT: 520-2/600-2

REGISTERS	MARKS	DATE
00-04, 14, 15	1000, 1001	April 12, 1972
		PROGRAMMER: James J. Gibson

BLOCK	VERIFY NO. – PRINT	NO. OF STEPS – PRINT	VERIFY NO. – DISPLAY	NO. OF STEPS – DISPLAY
8	1208	92	1183	92

PROGRAM DESCRIPTION:

This program calculates the deflection, the maximum deflection and the end slope for a cantilever beam which is uniformly loaded.

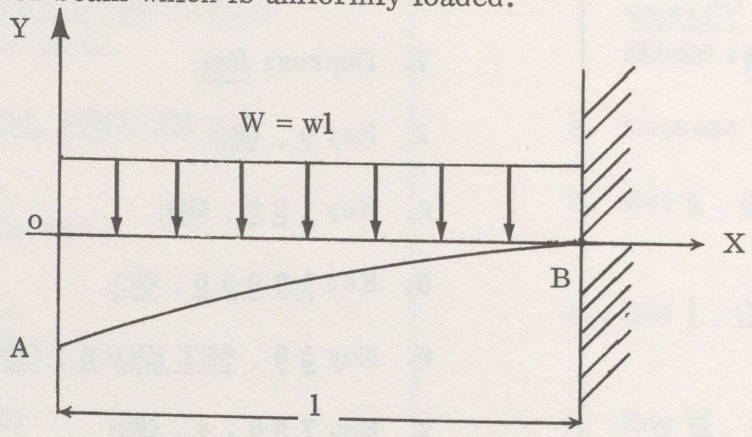

W	=	load (lbs)
w	=	unit load (lb. per linear ft.)
Y	=	deflection (positive if upward) (inches)
E	=	modulus of elasticity (psi)
I	=	moment of inertia (in^4)
l	=	length (inches)

© Wang Laboratories, Inc., 1972

Printed in U.S.A.

PROGRAM TITLE	NUMBER
CANTILEVER BEAM - UNIFORM LOAD	1046-2-CE3
	PAGE

θ = slope in radians ($\tan \theta = \theta$)

$$Y = -\frac{1}{24} \frac{W}{EIl} (x^4 - 4l^3x + 3l^4)$$

$$\text{Max } Y = -\frac{1}{8} \frac{Wl^3}{EI}$$

$$\theta = \frac{1}{6} \frac{Wl^2}{EI} \text{ at A}$$

Reference: Roark, Raymond J., Formulas For Stress And Strain , Mc-Graw-Hill, N.Y., N.Y., 4th Ed., 1954.

OPERATING PROCEDURE

PRINTER

1. Key PRIME, LOAD PROGRAM, VERIFY PROGRAM: Display should read 1208;
2. Depress f(x), PRINTER ON;
3. Key l , 00, l labeled by "L";
4. Key w , GO, w labeled by "F"
5. Key E , GO , E labeled by "E"
6. Key I , GO, I labeled by "I"
7. READ: Max Y labeled by "M", θ labeled by "Z";

DISPLAY

1. Key PRIME, LOAD PROGRAM, VERIFY PROGRAM: Display should read 1183;
2. Depress f(x);
3. Key l , 00;
4. Key w , GO;
5. Key E , GO;
6. Key I , GO;
7. READ: Max Y , GO;
   θ;

© Wang Laboratories, Inc., 1970

PROGRAM TITLE	NUMBER
CANTILEVER BEAM - UNIFORM LOAD	1046-2-CE3
	PAGE

8. If you wish to find deflection at a given point,

   Key x , 01,
   READ: x labeled by "X"
   Y labeled by "Y"

8. If you wish to find deflection at a given point,

   Key x , 01,
   READ: Y;

EXAMPLE: We have a cantilever beam of rectangular cross section ($I = 72\ in^4$) which is 6 ft. long and has a uniform load of 1000 lb /ft. ($E = 30 \times 10^6$ psi). Find the deflection at the midpoint of the beam.

1. Key PRIME, LOAD PROGRAM, VERIFY PROGRAM: Display should read 1208;

2. Depress f(x), PRINTER ON;

3. Key 7 2 , 00;

4. Key 1 0 0 0 , GO;

5. Key 3 0 SET EXP 6 , GO;

6. Key 7 2 , GO;

7. READ

72.000	L
1000.000	F
3.000000000 +07	E
72.000	I
-.12959999	M
.00239999	Z

8. Key 3 6 , 01,
   READ:

36.00000000	X
-.04589999	Y

1. Key PRIME, LOAD PROGRAM, VERIFY PROGRAM: Display should read 1183;

2. Depress f(x);

3. Key 7 2 , 00;

4. Key 1 0 0 0 , GO;

5. Key 3 0 SET EXP 6 , GO;

6. Key 7 2 , GO;

7. READ: -.1295999999, GO,
   .0023999999;

8. Key 3 6 , 01,
   READ: -.0458999999

© Wang Laboratories, Inc., 1970

520/600 SERIES PROGRAM DESCRIPTION

TITLE	NO.
CANTILEVER BEAM - TRIANGULAR LOAD	1047-2-CE3
	EQUIPMENT: 520-2/600-2
REGISTERS: 00-05, 14, 15	MARKS: 1000, 1001
	DATE: April 12, 1971
	PROGRAMMER: James J. Gibson

BLOCK	VERIFY NO. – PRINT	NO. OF STEPS – PRINT	VERIFY NO. – DISPLAY	NO. OF STEPS – DISPLAY
9	1319	101	1294	101

PROGRAM DESCRIPTION:

This program calculates the deflection, maximum deflection and end slope of a cantilever beam with a triangular load.

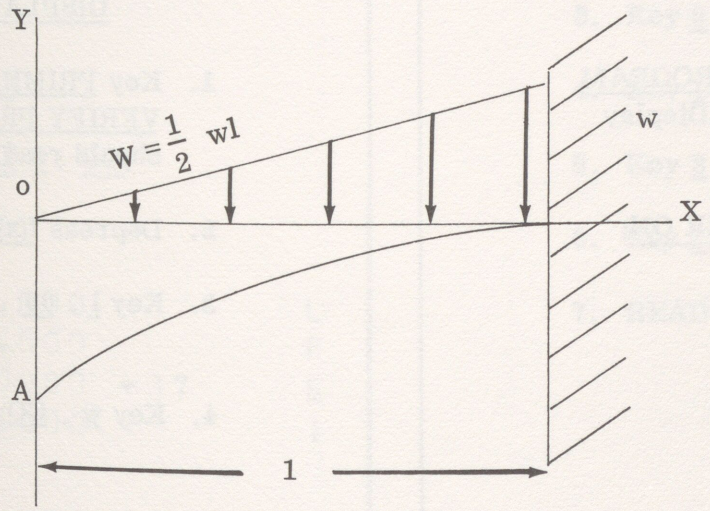

W = load
w = unit load (lb/linear ft)
1 = length (inches)
E = modulus of elasticity (psi)
I = moment of inertia

© Wang Laboratories, Inc., 1972

Printed in U.S.A.

PROGRAM TITLE	NUMBER
CANTILEVER BEAM - TRIANGULAR LOAD	1047-2-CE3
	PAGE

Y = deflection (positive if upwards) (inches)
θ = slope in radians (tan $\theta = \theta$)

$$Y = -\frac{1}{60} \quad \frac{W}{EIl^2} \quad (x^5 - 5l^4x + 4l^5)$$

$$\text{Max } Y = -\frac{1}{15} \quad \frac{Wl^3}{EI} \quad \text{at A}$$

$$\theta = \frac{1}{12} \quad \frac{Wl^2}{EI} \quad \text{at A}$$

Reference: Roark, Raymond J., Formulas Of Stress And Strain, McGraw-Hill, N.Y., N.Y., 4th Ed., 1954

OPERATING PROCEDURE

PRINTER

1. Key PRIME, LOAD PROGRAM VERIFY PROGRAM: Display should read 1319;
2. Depress f(x), PRINTER ON;
3. Key l , 00, l labeled by "L";
4. Key w , GO, w labeled by "F";
5. Key E, GO E labeled by "E";
6. Key I, GO, I labeled by "I";
7. READ: Max Y labeled by "M" θ labeled by "Z";

DISPLAY

1. Key PRIME, LOAD PROGRAM, VERIFY PROGRAM: Display should read 1294;
2. Depress f(x);
3. Key l , 00;
4. Key w , GO;
5. Key E , GO;
6. Key I, GO;
7. READ: Max Y, GO, θ;

© Wang Laboratories, Inc., 1970

PROGRAM TITLE	NUMBER
CANTILEVER BEAM - TRIANGULAR LOAD	1047-2-CE3
	PAGE

8. If you wish to find Y at a particular X,

Key x , 01,

READ: x labeled by "X"
Y labeled by "Y" ;

8. If you wish to find Y at a particular X,

Key x , 01,

READ: Y;

EXAMPLE: Consider a cantilever beam ($I = 120\ in^4$, $E = 30 \times 10^6$) of 8 ft. in length with a triangular load such that w = 1000 lb/ft. Find the deflection at the midpoint.

1. Key PRIME, LOAD PROGRAM, VERIFY PROGRAM: Display should read 1319;

2. Depress f(x), PRINTER ON;

3. Key 9 6 , 00;

4. Key 1 0 0 0 , GO;

5. Key 3 0 SET EXP 6 , GO;

6. Key 1 2 0 , GO;

7. READ:

```
     96.000          L
   1000.000          F
3.000000000  +07     E
    120.000          I

 -.06553599          M
  .00085333          Z
```

8. Key 4 8 , 01,

READ:

```
48.00000000          X
 -.02508799          Y
```

1. Key PRIME, LOAD PROGRAM, VERIFY PROGRAM: Display should read 1294;

2. Depress f(x);

3. Key 9 6 , 00;

4. Key 1 0 0 0 , GO;

5. Key 3 0 SET EXP 6 , GO;

6. Key 1 2 0 , GO;

7. READ: -.0655359999, GO,
.0008533333

8. Key 4 8 , 01,

READ: -.0250879999

© Wang Laboratories, Inc., 1970

520/600 SERIES PROGRAM DESCRIPTION

TITLE	NO.
END SUPPORTED BEAM - CENTER LOAD	1048-2-CE3
	EQUIPMENT: 520-2/600-2

REGISTERS	MARKS	DATE
00-05, 14, 15	1000, 1001	April 12, 1971
		PROGRAMMER: James J. Gibson

BLOCK	VERIFY NO. – PRINT	NO. OF STEPS – PRINT	VERIFY NO. – DISPLAY	NO. OF STEPS – DISPLAY
10	1071	83	1046	83

PROGRAM DESCRIPTION:

This program calculates deflection, maximum deflection and end slope of a beam which is center loaded and supported at the end.

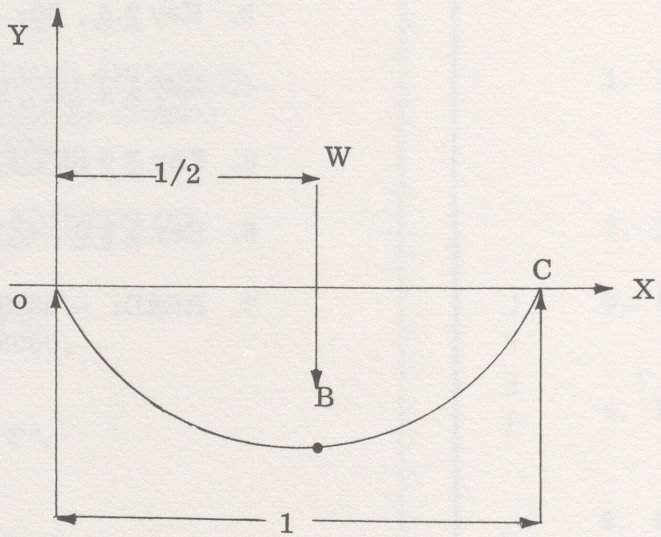

Y = deflection (inches)
W = load (lbs)
E = modulus of elasticity (psi)
I = moment of inertia (in^4)
l = length (inches)
θ = end slope (radians, $\tan \theta = \theta$)

© Wang Laboratories, Inc., 1972

Printed in U.S.A.

PROGRAM TITLE

END SUPPORTED BEAM - CENTER LOAD

NUMBER 1048-2-CE3

PAGE

$$Y = -\frac{1}{48}\ \frac{W}{EI}\ (3l^2x - 4x^3)\ \text{A to B}$$

$$\text{Max } Y = -\frac{1}{48}\ \frac{Wl^3}{EI}\ \text{at B}$$

$$\theta = \pm\frac{1}{16}\ \frac{Wl^2}{EI}\ \begin{cases} + \text{ if at B} \\ - \text{ if at A} \end{cases}$$

OPERATING PROCEDURE

PRINTER

1. Key PRIME, LOAD PROGRAM, VERIFY PROGRAM: Display should read 1071;
2. Depress f(x), PRINTER ON;
3. Key l, 00, l labeled by "L";
4. Key W, GO, W labeled by "F";
5. Key E, GO, E labeled by "E";
6. Key I, GO, I labeled by "I";
7. READ: Max Y labeled by "M"
   θ labeled by "Z"

DISPLAY

1. Key PRIME, LOAD PROGRAM, VERIFY PROGRAM: Display should read 1046;
2. Depress f(x);
3. Key l , 00;
4. Key W , GO;
5. Key E, GO;
6. Key I, GO;
7. READ: Max Y, GO,
   θ;

Reference: Roark, Raymond J., Formulas Of Stress And Strain, McGraw-Hill, N.Y., N.Y., 4th Ed., 1954.

© Wang Laboratories, Inc., 1970

PROGRAM TITLE	NUMBER
END SUPPORTED BEAM - CENTER LOAD	1048-2-CE3
	PAGE

8. If you wish to find Y at a particular x,

   Key x, 01,

   READ: x labeled by "X"
   Y labeled by "Y" ;

8. If you wish to find Y at a particular x,

   Key x , 01,

   READ: Y;

EXAMPLE: We have a beam which is supported at the ends with a center load of 765 lbs. The beam is 14 ft. long ($E = 30 \times 10^6$ psi, $I = 12.6$ in^4). Find the deflection at x = 50 inches.

1. Key PRIME, LOAD PROGRAM, VERIFY PROGRAM: Display should read 1071;

2. Depress f(x), PRINTER ON;

3. Key 1 6 8 , 00;

4. Key 7 6 5 , GO;

5. Key 3 0 SET EXP 6 , GO;

6. Key 1 2 . 6 , GO;

7. READ:

```
168.000              L
765.000              F
3.000000000 +07      E
12.600               I


-.19991999           M
.00356999            Z
```

8. Key 5 0 , 01,

   READ:

```
50.00000000          X
-.15741865           Y
```

1. Key PRIME, LOAD PROGRAM, VERIFY PROGRAM: Display should read 1046;

2. Depress f(x);

3. Key 1 6 8 , 00;

4. Key 7 6 5 , GO;

5. Key 3 0 SET EXP 6 , GO;

6. Key 1 2 . 6 , GO;

7. READ: -1.999199999, GO,
   .0035699999;

8. Key 5 0 , 01,

   READ: -.1574186507

© Wang Laboratories, Inc., 1970

520/600 SERIES PROGRAM DESCRIPTION

TITLE	NO.
END SUPPORTED BEAM - UNIFORM LOAD	1049-2-CE3
	EQUIPMENT: 520-2/600-2
REGISTERS: 00 - 05, 14, 15	MARKS: 1000, 1001
	DATE: April 13, 1971
	PROGRAMMER: James J. Gibson

BLOCK	VERIFY NO. – PRINT	NO. OF STEPS – PRINT	VERIFY NO. – DISPLAY	NO. OF STEPS – DISPLAY
11	1250	97	1225	97

PROGRAM DESCRIPTION:

This program calculates deflection, maximum deflection and end slope of an end supported beam with uniformly distributed load.

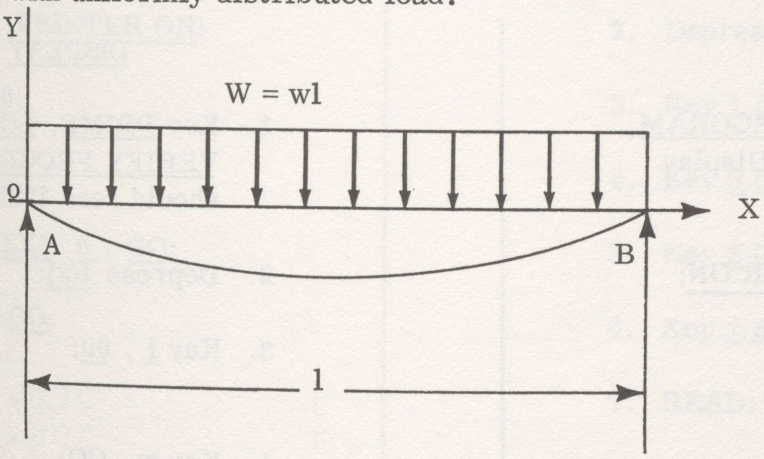

x = distance along X-Axis (inches)

l = length (inches)

Y = deflection (inches) (positive if upward)

W = load (lb.)

E = modulus of elasticity

I = moment of inertia (in^4)

θ = end slope (radians, $\tan \theta = \theta$)

w = unit load (lb./ft.)

© Wang Laboratories, Inc., 1972

Printed in U.S.A.

PROGRAM TITLE	NUMBER
END SUPPORTED BEAM - UNIFORM LOAD	1049-2-CE3
	PAGE

$$Y = -\frac{1}{24} \quad \frac{Wx}{EIl} \quad (l^3 - 2lx^2 + x^3)$$

$$\text{Max } Y = -\frac{5}{384} \quad \frac{Wl^3}{EI} \quad \text{at } x = \frac{1}{2}\ l$$

$$\theta = \pm \frac{1}{24} \quad \frac{Wl^2}{EI} \qquad \left\{\begin{matrix} + \text{ if at B} \\ - \text{ if at A} \end{matrix}\right\}$$

Reference: Roark, Raymond J., Formulas Of Stress And Strain, McGraw-Hill, N.Y., N.Y., 4th Ed., 1954.

OPERATING PROCEDURE

PRINTER

1. Key PRIME, LOAD PROGRAM, VERIFY PROGRAM: Display should read 1250;
2. Depress f(x), PRINTER ON;
3. Key l , 00, l labeled by "L";
4. Key w , GO, w labeled by "F"
5. Key E, GO, E labeled by "E";
6. Key I, GO, I labeled by "I";
7. READ: Max Y labeled by "M"
   θ labeled by "Z"

DISPLAY

1. Key PRIME, LOAD PROGRAM, VERIFY PROGRAM: Display should read 1225;
2. Depress f(x);
3. Key l , 00;
4. Key w , GO;
5. Key E, GO;
6. Key I, GO;
7. READ: Max Y, GO, θ;

© Wang Laboratories, Inc., 1970

PROGRAM TITLE	NUMBER
END SUPPORTED BEAM - UNIFORM LOAD	1049-2-CE3
	PAGE

8. If you wish to find Y at a particular x,

   Key x , 01,

   READ: x labeled by "X"
   Y labeled by "Y";

8. If you wish to find Y at a particular x,

   Key x , 01,

   READ: Y

EXAMPLE: Consider a beam 9 ft. in length which is supported at the ends and has a load distribution of 500 lb/ft. ($E = 30 \times 10^6$ psi, $I = 78.7$ in^4). Find the deflection at a point 36 in. from the left support.

1. Key PRIME, LOAD PROGRAM, VERIFY PROGRAM: Display should read 1250;

2. Depress f(x), PRINTER ON;

3. Key 1 0 8 , 00;

4. Key 5 0 0 , GO;

5. Key 3 0 SET EXP 6 , GO;

6. Key 7 8 . 7 , GO;

7. READ:

```
108.000
500.000
3.000000000 +07        L
 78.700                F
                       E
                       I

-.03126270             M
 .00092630             Z
```

8. Key 3 6 , 01,

   READ:

```
36.00000000            X
-.02717153             Y
```

1. Key PRIME, LOAD PROGRAM, VERIFY PROGRAM: Display should read 1225;

2. Depress f(x);

3. Key 1 0 8 , 00;

4. Key 5 0 0 , GO;

5. Key 3 0 SET EXP 6 , GO;

6. Key 7 8 . 7 , GO;

7. READ: -.0312627064, GO,
   .0009263024;

8. Key 3 6 , 01,

   READ: -.0271715374

© Wang Laboratories, Inc., 1970

520/600 SERIES PROGRAM DESCRIPTION

TITLE	NO.
END SUPPORTED BEAM - TRIANGULAR LOAD	1050-2-CE3
	EQUIPMENT: 520-2/600-2

REGISTERS	MARKS	DATE
00 - 05, 14, 15	1000, 1001	April 13, 1971
		PROGRAMMER: James J. Gibson

BLOCK	VERIFY NO. – PRINT	NO. OF STEPS – PRINT	VERIFY NO. – DISPLAY	NO. OF STEPS – DISPLAY
12	1553	126	1528	126

PROGRAM DESCRIPTION:

This program calculates deflection, maximum deflection and end slope of an end supported beam with a triangular load distribution.

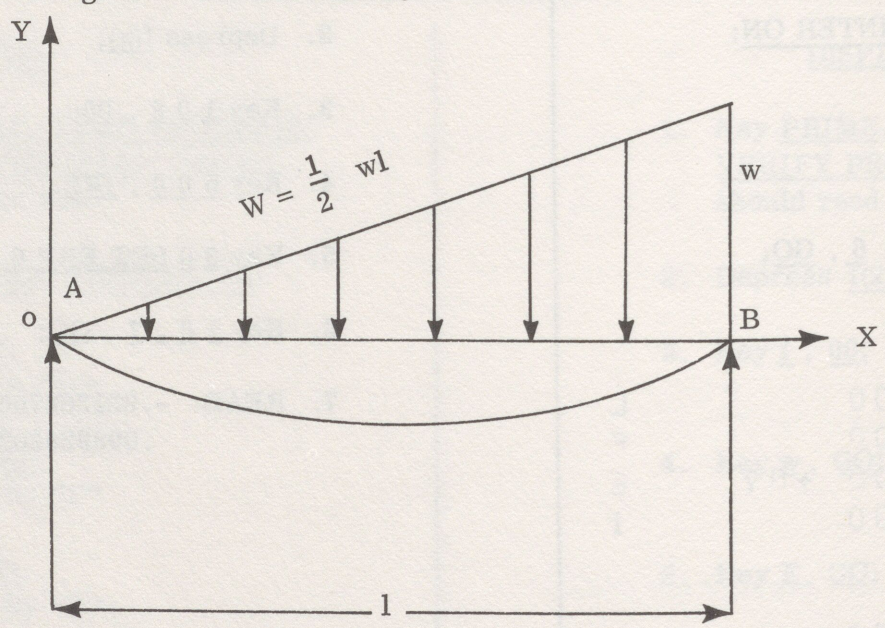

Y	=	deflection (positive if upward) (inches)
W	=	load (lbs)
w	=	unit load (lbs/ft)
E	=	modulus of elasticity (psi)
I	=	moment of inertia (in^4)
x	=	distance from origin (inches)
l	=	length (inches)
θ	=	end slope (radians, tan θ = θ)

© Wang Laboratories, Inc., 1972

Printed in U.S.A.

PROGRAM TITLE

END SUPPORTED BEAM - TRIANGULAR LOAD

NUMBER

1050-2-CE3

PAGE

$$Y = -\frac{1}{180}\ \frac{Wx}{EIl^2}\ (3x^4 - 10l^2x^2 + 7l^4)$$

$$\text{Max } Y = -0.01304\ \frac{Wl^3}{EI} \quad \text{at } x = .519\,l$$

$$\theta = \begin{cases} -\frac{7}{180}\ \frac{Wl^2}{EI} & \text{at A} \\ +\frac{8}{180}\ \frac{Wl^2}{EI} & \text{at B} \end{cases}$$

Reference: Roark, Raymond J., Formulas Of Stress And Strain, McGraw-Hill, N.Y., N.Y., 4th Ed., 1954.

OPERATING PROCEDURE

PRINTER

1. Key PRIME, LOAD PROGRAM, VERIFY PROGRAM: Display should read 1553;
2. Depress f(x), PRINTER ON;
3. Key l , 00, l labeled by "L";
4. Key w , GO, w labeled by "F";
5. Key E, GO, E labeled by "E";
6. Key I, GO, I labeled by "I";

DISPLAY

1. Key PRIME, LOAD PROGRAM, VERIFY PROGRAM: Display should read 1528;
2. Depress f(x);
3. Key l , 00;
4. Key w , GO;
5. Key E, GO;
6. Key I, GO;

© Wang Laboratories, Inc., 1970

PROGRAM TITLE	NUMBER
END SUPPORTED BEAM - TRIANGULAR LOAD	1050-2-CE3
	PAGE

7. READ: Max Y labeled by "M"
θ_A labeled by "A"
θ_B labeled by "B"

8. If you wish to find Y at a particular x,

Key x, 01,
READ: x labeled by "X"
Y labeled by "Y";

7. READ: Max Y, GO,
θ_A, GO,
θ_B;

8. If you wish to find Y at a particular x,

Key x, 01,
READ: Y

EXAMPLE: Consider a beam 5 ft. in length. ($E = 30 \times 10^6$ psi, $I = 46.7$ in^4) with triangular load w = 1000 lb/ft. Find the deflection at a distance of 3 ft. from the left support.

1. Key PRIME, LOAD PROGRAM, VERIFY PROGRAM: Display should read 1553;

2. Depress f(x), PRINTER ON;

3. Key 6 0, 00;

4. Key 1 0 0 0, GO;

5. Key 3 0 SET EXP 6, GO;

6. Key 4 6 . 7, GO;

7. READ:

60.000	L
1000.000	F
3.0000000000+07	E
46.700	I
-.00502612	M
-.00024982	A
.00028551	B

8. Key 3 6, 01,
READ:

36.00000000	X
-.00486783	Y

1. Key PRIME, LOAD PROGRAM, VERIFY PROGRAM: Display should read 1528;

2. Depress f(x);

3. Key 6 0, 00;

4. Key 1 0 0 0, GO;

5. Key 3 0 SET EXP 6, GO;

6. Key 4 6 . 7, GO;

7. READ: -.0050261241, GO,
-.0002493215, GO,
.0002855103;

8. Key 3 6, 01,
READ: -.0048678372

© Wang Laboratories, Inc. 1972

520/600 SERIES PROGRAM DESCRIPTION

TITLE	NO.
BOND DOLLAR PRICE AND YIELD	1051-2-BF2
	EQUIPMENT: 520-2/600-2

REGISTERS	MARKS	DATE
00 - 13, 15	0000-0004, 1000, 1001, 1004 1100-1106, 1114, 1115	March 12, 1971
		PROGRAMMER: R. Williams/ R. Orlando

BLOCK	VERIFY NO. – PRINT	NO. OF STEPS – PRINT	VERIFY NO. – DISPLAY	NO. OF STEPS – DISPLAY
13	3279	281	3290	281

PROGRAM DESCRIPTION:

This program calculates the yield to maturity from dollar prices and the dollar prices from yields, for bonds with maturities 6 months to 100 years redeemed at par.

The following is a list of the content and purpose of each subroutine in this program:

f(x)	TITLE	PURPOSE
14	RETAIN SETTLEMENT DATE	Stores the settlement date in memory.
15	RECALL SETTLEMENT DATE	Recalls settlement date from storage and displays it.
00	DOLLAR PRICE	Calculates dollar prices from yields, for bonds with maturities from 6 months to 100 years, redeemed at par.
01	YIELD TO MATURITY	Calculates the yield to maturity from dollar prices, for bonds with maturities from 6 months to 100 years, redeemed at par.

© Wang Laboratories, Inc., 1972

Printed in U.S.A.

PROGRAM TITLE	NUMBER
BOND DOLLAR PRICES AND YIELD	1051-2-BF2
	PAGE

GENERAL OPERATING PROCEDURE:

The general operating procedure for use of either subroutine 00 or 01 is the following:

PRINTER	DISPLAY
1. Key PRIME, LOAD PROGRAM, VERIFY PROGRAM: Display should read 3279	1. Key PRIME, LOAD PROGRAM, VERIFY PROGRAM: Display should read 3290
2. Depress f(x), PRINTER ON;	2. Depress f(x);
3. Store settlement date* according to subroutine 14.	3. Store settlement date* according to subroutine 14.

*The settlement must be stored in memory before either subroutine 00 or 01 can be executed.

The operating instructions for subroutines 14, 15, 00 and 01 are on the following pages.

© Wang Laboratories, Inc., 1970

RETAIN SETTLEMENT DATE f(x) 14	Stores settlement date in memory*

OPERATING PROCEDURE

1. Key SETTLEMENT MONTH, 14;
2. Key SETTLEMENT DAY, GO;
3. Key SETTLEMENT YEAR**, GO;

*Settlement date will remain in memory until it is changed by the above procedure.

**Only the last two digits of the year should be indexed in the 20th century (i.e. for 1971, Key 7 1).
The last three digits of the year should be indexed for dates in the 21st (or above) century (i.e. for 2115, Key 1 1 5).

RECALL SETTLEMENT DATE f(x) 15	Displays the settlement date with a half-second pause between month, day and year.

OPERATING PROCEDURE

1. Key 15

© Wang Laboratories, Inc., 1970

PROGRAM TITLE	NUMBER
BOND DOLLAR PRICES AND YIELD	1051-2-BF2
	PAGE

DOLLAR PRICE
f(x) 00

Calculates dollar prices from yields, for bonds with maturities from 6 months to 100 years, redeemed at par.

OPERATING PROCEDURE

PRINTER	DISPLAY
1. Key COUPON, 00; COUPON labeled by "C" Stored settlement date will be printed out with month, day and year labeled "M", "D" and "Y" respectively.	1. Key COUPON, 00;
2. Key MATURITY MONTH, GO; MATURITY MONTH labeled by "M" Key MATURITY DAY, GO; MATURITY DAY labeled by "D" Key MATURITY YEAR, GO; MATURITY YEAR labeled by "Y"	2. Key MATURITY MONTH, GO, MATURITY DAY, GO, MATURITY YEAR, GO;
3. Key YIELD, GO; YIELD labeled by "Y"	3. Key YIELD, GO;
4. READ: DOLLAR PRICE DOLLAR PRICE labeled by "D" For additional dollar prices using different yields, repeat steps 3 and 4.	4. READ: DOLLAR PRICE For additional dollar prices using different yields, repeat steps 3 and 4.
5. For ACCRUED INTEREST: Key 04; READ: ACCRUED INTEREST (per $100) ACCRUED INTEREST labeled by "I"	5. For ACCRUED INTEREST: Key 04; READ: ACCRUED INTEREST (per $100)

© Wang Laboratories, Inc., 1970

PROGRAM TITLE	NUMBER
BOND DOLLAR PRICES AND YIELD	1051-2-BF2
	PAGE

EXAMPLE: Find the dollar price and accrued interest for the following data:

SETTLEMENT DATE: 5/3/70
COUPON: 4.78%
MATURITY DATE: 2/21/89
YIELD: 6.45

1. Key 4 . 7 8, 00;

2. Key 2, GO,
   2 1, GO,
   8 9, GO;

3. Key 6 . 4 5, GO;

4. READ:

4.780	C
5.	M
3.	D
70.	Y
2.	M
21.	D
89.	Y
6.450	Y
81.949	D

5. Key 04;
   READ:

.956000	I

1. Key 4 . 7 8, 00;

2. Key 2, GO,
   2 1, GO,
   8 9, GO;

3. Key 6 . 4 5, GO;

4. READ: 81.94900000

5. Key 04;
   READ: .95600000000

© Wang Laboratories, Inc., 1970

PROGRAM TITLE	NUMBER
BOND DOLLAR PRICES AND YIELD	1051-2-BF2
	PAGE

YIELD TO MATURITY

f(x) 01

Calculates the yield to maturity from dollar prices, for bonds with maturities 6 months to 100 years, redeemed at par.

OPERATING PROCEDURE

PRINTER	DISPLAY
1. Key COUPON, 01; COUPON labeled by "C" Stored settlement date will be printed out with month, day and year labeled "M", "D" and "Y" respectively.	1. Key COUPON, 01;
2. Key MATURITY MONTH, GO; MATURITY MONTH labeled by "M" Key MATURITY DAY, GO; MATURITY DAY labeled by "D" Key MATURITY YEAR, GO; MATURITY YEAR labeled by "Y"	2. Key MATURITY MONTH, GO, MATURITY DAY, GO, MATURITY YEAR, GO;
3. Key DOLLAR PRICE, GO; DOLLAR PRICE labeled by "D"	3. Key DOLLAR PRICE, GO;
4. READ: YIELD YIELD labeled by "Y" For additional yields using different dollar prices, repeat steps 3 and 4.	4. READ: YIELD For additional yields using different dollar prices, repeat steps 3 and 4.
5. For ACCRUED INTEREST: Key 04; READ: ACCRUED INTEREST (per $100) ACCRUED INTEREST labeled by "I"	5. For ACCRUED INTEREST: Key 04; READ: ACCRUED INTEREST (per $100)

© Wang Laboratories, Inc., 1970

PROGRAM TITLE	NUMBER
BOND DOLLAR PRICES AND YIELD	1051-2-BF2
	PAGE

EXAMPLE: Find the yield to maturity and accrued interest for the following data:

SETTLEMENT DATE: 5/3/70
COUPON: 4.78%
MATURITY DATE: 2/21/89
DOLLAR PRICE 81.949

1. Key 4 . 7 8, 01;

2. Key 2, GO,
   21, GO,
   89, GO;

3. Key 8 1 . 9 4 9, GO;

4. READ:

4.780	C
5.	M
3.	D
70.	Y
2.	M
21.	D
89.	Y
81.949	D
6.450	Y

5. Key 04;
   READ:

.956000 I

1. Key 4 . 7 8, 01;

2 Key 2, GO,
   21, GO,
   89, GO,

3. Key 8 1 . 9 4 9, GO;

4. READ: 6.450000000

5. Key 04;
   READ: .9560000000

© Wang Laboratories, Inc., 1970

520/600 SERIES PROGRAM DESCRIPTION

TITLE	NO.
PERIODIC PAYMENT	1052-2-BF2
	EQUIPMENT: 520-2/600-2

REGISTERS	MARKS	DATE	PROGRAMMER
01-04, 14, 15	1000, 1001	March 17, 1971	James J. Gibson

BLOCK	VERIFY NO. – PRINT	NO. OF STEPS – PRINT	VERIFY NO. – DISPLAY	NO. OF STEPS – DISPLAY
14	792	62	797	62

PROGRAM DESCRIPTION

This program calculates the amount which must be payed back periodically for a given loan, at a specified interest, for a given term with a specified number of payments per year.

The following formula is used:

$$A = \frac{L\left(\frac{i}{100 \cdot F}\right)}{1 - \left(1 + \frac{i}{100 \cdot F}\right)^{-Y \cdot F}}$$

where L = amount of loan
i = amount interest rate in %
F = number of payments per year
Y = number of years of the term of the loan
A = periodic payment

© Wang Laboratories, Inc., 1972

Printed in U.S.A.

PROGRAM TITLE	NUMBER
PERIODIC PAYMENT	1052-2-BF2
	PAGE

OPERATING PROCEDURE

PRINTER	DISPLAY
1. Key PRIME, LOAD PROGRAM, VERIFY PROGRAM: Display should read 792	1. Key PRIME, LOAD PROGRAM, VERIFY PROGRAM: Display should read 797
2. Depress f(x), PRINTER ON;	2. Depress f(x);
3. Key L, 00; L labeled by "L"	3. Key L, 00;
4. Key i, GO; i labeled by "I"	4. Key i, GO;
5. Key F, GO; F labeled by "F"	5. Key F, GO;
6. Key Y, GO; Y labeled by "Y"	6. Key Y, GO;
7. READ: A labeled by "A"	7. READ: A
8. OPTION: If you wish to change the term of the loan, Y, Key new Y, 01; READ: new Y labeled by "Y" new A labeled by "A"	8. OPTION: If you wish to change the term of the loan, Y, Key new Y, 01; READ: new A

EXAMPLE: Calculate the periodic payment, A, for the following data:

L = $3000
i = 8%
F = 12 payments
Y = 1.5 years.

1. Key PRIME, LOAD PROGRAM, VERIFY PROGRAM: Display should read 792	1. Key PRIME, LOAD PROGRAM, VERIFY PROGRAM: Display should read 797
2. Depress f(x), PRINTER ON;	2. Depress f(x);
3. Key 3 0 0 0, 00;	3. Key 3 0 0 0, 00;

© Wang Laboratories, Inc., 1970

PROGRAM TITLE	NUMBER
PERIODIC PAYMENT	1052-2-BF2
	PAGE

4. Key 8, GO;

5. Key 1 2, GO;

6. Key 1 . 5, GO;

7. READ:

3000.00	L
8.000	I
12.	F
1.50	Y
177.42	A

8. Suppose you wish to change Y = 1.5 to Y = 3
Key 3, 01;
READ:

3.00	Y
94.00	A

4. Key 8, GO;

5. Key 1 2, GO;

6. Key 1 . 5, GO;

7. READ: 177.4208961

8. Suppose you wish to change Y = 1.5 to Y = 3
Key 3, 01;
READ: 94.00909659

© Wang Laboratories, Inc., 1970

520/600 SERIES PROGRAM DESCRIPTION

TITLE	NO.
ADD-ON INTEREST PAYMENTS	1053-2-BF2
	EQUIPMENT: 520-2/600-2

REGISTERS	MARKS	DATE
00-07, 14, 15	1000 - 1007	March 17, 1971
		PROGRAMMER: James J. Gibson

BLOCK	VERIFY NO. – PRINT	NO. OF STEPS – PRINT	VERIFY NO. – DISPLAY	NO. OF STEPS – DISPLAY
15	2033	162	2026	162

PROGRAM DESCRIPTION

This program calculates monthly payment, given loan amount, other charges, number of months financed, number of days till first payment and add-on interest. It will also calculate the annual percentage rate, APR.

The following equation is used:

$$T = \left[\frac{i}{100}\left(\frac{M}{12}\right) + 1\right] L$$

where
T = total amount financed
L = total loan = B+C
B = amount borrowed
C = additional charges
M = number of months over which loan is financed
i = add-on interest (%)

© Wang Laboratories, Inc., 1972

Printed in U.S.A.

PROGRAM TITLE	NUMBER
ADD-ON INTEREST PAYMENTS	1053-2-BF2
	PAGE

The program will automatically calculate the amount financed, T, the monthly payment T/M, and the finance charge, T-L. As an option, the annual percentage rate, APR, can also be calculated.

OPERATING PROCEDURE

PRINTER

1. Key PRIME, LOAD PROGRAM, VERIFY PROGRAM: Display should read 2033
2. Depress f(x), PRINTER ON;
3. To store the variables:
   a) Key B, 01;
   b) Key C, 02;
   c) Key M, 03;
   d) Key i, 04;
4. Key 00;
5. READ: B labeled by "B"
   C labeled by "C"
   L labeled by "L"
   M labeled by "M"
   i labeled by "I"
   T-L labeled by "F"
   $\frac{T}{M}$ labeled by "M"
6. To find APR,
   Key GO;
   READ: APR labeled by "I"
7. If you wish to change a particular input,
   Key INPUT; (refer to step 3)
   Key appropriate 0X;
   i.e., to change i to 9%:
   Key 9, 04;

DISPLAY

1. Key PRIME, LOAD PROGRAM, VERIFY PROGRAM: Display should read 2026
2. Depress f(x);
3. To store the variables:
   a) Key B, 01;
   b) Key C, 02;
   c) Key M, 03;
   d) Key i, 04;
4. Key 00;
5. READ: T, GO,
   T-L, GO
   $\frac{T}{M}$;
6. To find APR,
   Key GO;
   READ: APR
7. If you wish to change a particular input,
   Key INPUT; (refer to step 3)
   Key approximate 0X;
   i.e. to change i to 9%
   Key 9, 04;

© Wang Laboratories, Inc., 1970

Then proceed with step 4.

Then proceed with step 4

EXAMPLE: Find the monthly payment, finance charge and APR for the following data:

B = $4500
C = $0
M = 36 months
i = 8%

1. Key PRIME, LOAD PROGRAM, VERIFY PROGRAM: Display should read 2033

2. Depress f(x), PRINTER ON;

3. a) Key 4 5 0 0, 01;
   b) Key 0, 02;
   c) Key 3 6, 03;
   d) Key 8, 04;

4. Key 00;

5. READ:

```
4500.00        B
   0.00        C
4500.00        L

   36.         M
 8.000         I

5580.00        A
1080.00        F

 155.00        M
```

6. Key GO;
   READ:

```
14.5481        I
```

1. Key PRIME, LOAD PROGRAM, VERIFY PROGRAM: Display should read 2026

2. Depress f(x);

3. a) Key 4 5 0 0, 01;
   b) Key 0, 02;
   c) Key 3 6, 03;
   d) Key 8, 04;

4. Key 00;

5. READ: 5580.000000, GO,
   1080.000000, GO,
   155.0000000

6. Key GO;
   READ: 14.54815925

© Wang Laboratories, Inc., 1970

520/600 SERIES PROGRAM DESCRIPTION

TITLE	NO.
COMPOUND INTEREST AND AMOUNT	1054-2-BF2
	EQUIPMENT: 520-2/600-2
REGISTERS: 01-04, 14, 15 / MARKS: 1000, 1001	DATE: March 18, 1971
	PROGRAMMER: James J. Gibson

BLOCK	VERIFY NO. – PRINT	NO. OF STEPS – PRINT	VERIFY NO. – DISPLAY	NO. OF STEPS – DISPLAY
16	734	59	740	59

PROGRAM DESCRIPTION:

When interest is regularly added to the principal and this new sum is used as the principal for the following time period and this procedure is repeated for a certain number of periods, the final amount is called the compound amount. The formula for compound amount is given by:

$$A = P\left(1 + \frac{i}{100 \cdot n}\right)^{Y \cdot n}$$

where:

P = original principal
i = yearly rate of interest (%)
n = number of compounding periods per year
Y = number of years
A = compound amount

In order to determine the compound interest alone, simply subtract the principal, P, from the amount, A.

Compound Interest, C = A - P

© Wang Laboratories, Inc., 1972

Printed in U.S.A.

PROGRAM TITLE	NUMBER
COMPOUND INTEREST AND AMOUNT	1054-2-BF2
	PAGE

OPERATING PROCEDURE

PRINTER

1. Key PRIME, LOAD PROGRAM, VERIFY PROGRAM: Display should read 734
2. Depress f(x), PRINTER ON;
3. Key P, 00;
   P labeled by "L"
4. Key i, GO;
   i labeled by "I"
5. Key n, GO;
   n labeled by "F"
6. Key y, GO;
   Y labeled by "Y"
7. READ: A labeled by "A"
8. To get C:

   Key GO;
   READ: C labeled by "C"
9. If you wish to change number of years,
   Key new Y, 01;
   READ: new A
   Key GO;
   READ: new C

DISPLAY

1. Key PRIME, LOAD PROGRAM, VERIFY PROGRAM: Display should read 740
2. Depress f(x);
3. Key P, 00;
4. Key i, GO;
5. Key n, GO;
6. Key y, GO;
7. READ: A
8. To get C:

   Key GO;
   READ: C
9. If you wish to change number of years,
   Key new Y, 01;
   READ: new A
   Key GO;
   READ: new C

© Wang Laboratories, Inc., 1970

PROGRAM TITLE	NUMBER
COMPOUND INTEREST AND AMOUNT	1054-2-BF2
	PAGE

EXAMPLE: Calculate compound amount A, and compound interest, C for the following data:

P = $10,000
i = 6%
n = 1 (i.e., compounded annually)
Y = 5 years

1. Key PRIME, LOAD PROGRAM, VERIFY PROGRAM: Display should read 734
2. Depress f(x), PRINTER ON;
3. Key 1 0 0 0 0, 00;
4. Key 6, GO;
5. Key 1, GO;
6. Key 5, GO;
7. READ:

```
10000.00        L
  6.0000        I
      1.        F
    5.00        Y

13382.26        A
```

8. Key GO;
   READ:

```
 3382.26        C
```

9. Suppose you wish to make Y = 6:

   Key 6, 01;
   READ:

```
   6.00         Y

14185.19        A
```

   Key GO;
   READ:

```
 4185.19        C
```

1. Key PRIME, LOAD PROGRAM, VERIFY PROGRAM: Display should read 740
2. Depress f(x);
3. Key 1 0 0 0 0, 00;
4. Key 6, GO;
5. Key 1, GO;
6. Key 5, GO;
7. READ: 13382.26077
8. Key GO;
   READ: 3382.260775
9. Suppose you wish to make Y = 6:

   Key 6, 01;
   READ: 14185.19612

   Key GO;
   READ: 4185.196121

© Wang Laboratories, Inc., 1970

520/600 SERIES PROGRAM DESCRIPTION

TITLE	NO.
PRESENT VALUE OF A SERIES OF YEARLY CASH FLOWS	1055-2-BF1
	EQUIPMENT: 520-2/600-2

REGISTERS	MARKS	DATE
00 - 04, 14, 15	0000, 1000, 1100	March 18, 1971
		PROGRAMMER: James J. Gibson

BLOCK	VERIFY NO. – PRINT	NO. OF STEPS – PRINT	VERIFY NO. – DISPLAY	NO. OF STEPS – DISPLAY
17	566	55	577	55

PROGRAM DESCRIPTION:

This program calculates the present value of a series of yearly cash flows whether the cash flows are positive, negative or zero

The program uses the following formula:

$$\text{PRESENT VALUE} = \sum_{j=1}^{Y} (\text{CASH FLOW})_j \left(1 + \frac{i}{100}\right)^{-j}$$

where:

i = annual interest (%)
j = year (up to Y)

© Wang Laboratories, Inc., 1972

Printed in U.S.A.

PROGRAM TITLE	NUMBER
PRESENT VALUE OF A SERIES OF YEARLY CASH FLOWS	1055-2-BF1
	PAGE

OPERATING PROCEDURE

PRINTER	DISPLAY
1. Key PRIME, LOAD PROGRAM, VERIFY PROGRAM: Display should read 566	1. Key PRIME, LOAD PROGRAM, VERIFY PROGRAM: Display should read 577
2. Depress f(x), PRINTER ON;	2. Depress f(x);
3. Key i, 00; i labeled by "I"	3. Key i, 00;
4. Key CASH FLOW, GO; starting with first year 1. (for first year), 2. (for second year) etc. will be printed out, labeled by "Y", followed by the corresponding Cash Flow labeled by "C"	4. Key CASH FLOW, GO; starting with first year
5. After all cash flows are keyed in: Key SEARCH 0;	5. After all cash flows are keyed in: Key SEARCH 0;
6. READ: PRESENT VALUE PRESENT VALUE labeled by "A"	6. READ: PRESENT VALUE

© Wang Laboratories, Inc., 1970

PROGRAM TITLE	NUMBER
PRESENT VALUE OF A SERIES OF YEARLY CASH FLOWS	1055-2-BF1
	PAGE

EXAMPLE: Calculate the present value of the following series of yearly cash flows:

YEAR (Y)	CASH FLOW ($)
1	-3750
2	- 820
3	0
4	1575
5	7300
6	12500
7	19000

i = 5.25%

1. Key PRIME, LOAD PROGRAM, VERIFY PROGRAM: Display should read 566
2. Depress f(x), PRINTER ON:
3. Key 5 . 2 5, 00;
4. Key 3 7 5 0 CH SIGN GO,
   8 2 0 CH SIGN GO,
   0 GO,
   1 5 7 5 GO,
   7 3 0 0 GO,
   1 2 5 0 0 GO,
   1 9 0 0 0 GO;
5. Key SEARCH 0;
6. READ:

Sample output is on the following page.

1. Key PRIME, LOAD PROGRAM, VERIFY PROGRAM: Display should read 577
2. Depress f(x)
3. Key 5 . 2 5, 00;
4. Key 3 7 5 0 CH SIGN GO,
   8 2 0 CH SIGN GO,
   0 GO,
   1 5 7 5 GO,
   7 3 0 0 GO,
   1 2 5 0 0 GO,
   1 9 0 0 0 GO;
5. Key SEARCH 0;
6. READ: 25108.01352

© Wang Laboratories, Inc., 1970

PROGRAM TITLE	NUMBER
PRESENT VALUE OF A SERIES OF YEARLY CASH FLOWS	1055-2-BF1
	PAGE

```
      5.2500          I

         1.           Y
   -3750.00           C

         2.           Y
    -820.00           C

         3.           Y
       0.00           C

         4.           Y
    1575.00           C

         5.           Y
    7300.00           C

         6.           Y
   12500.00           C

         7.           Y
   19000.00           C


   25108.01           A
```

© Wang Laboratories, Inc., 1970

520/600 SERIES PROGRAM DESCRIPTION

TITLE	NO.
PERIODIC INVESTMENT	1056-2-BF2
	EQUIPMENT: 520-2/600-2
REGISTERS: 01-,04, 15 / MARKS: 1000, 1001	DATE: March 18, 1971
	PROGRAMMER: James J. Gibson

BLOCK	VERIFY NO. – PRINT	NO. OF STEPS – PRINT	VERIFY NO. – DISPLAY	NO. OF STEPS – DISPLAY
18	680	56	692	56

PROGRAM DESCRIPTION:

This program finds the periodic investment, D, which will result in a sum A, if D is invested at interest, i, F times a year for Y years.

$$D = A \left[\frac{\frac{i}{100 \cdot F}}{\left(1 + \frac{i}{100 \cdot F}\right)^{Y \cdot F} - 1} \right]$$

where:

D = periodic investment (payroll deductions)
A = sum at the end of N years
i = nominal annual interest
F = number of investments or deductions per year
Y = number of years

© Wang Laboratories, Inc., 1972

Printed in U.S.A.

PROGRAM TITLE	NUMBER
PERIODIC INVESTMENT	1056-2-BF2
	PAGE

OPERATING PROCEDURE

PRINTER	DISPLAY
1. Key PRIME, LOAD PROGRAM, VERIFY PROGRAM: Display should read 680	1. Key PRIME, LOAD PROGRAM, VERIFY PROGRAM: Display should read 692
2. Depress f(x), PRINTER ON;	2. Depress f(x);
3. Key A, 00; A labeled by "A"	3. Key A, 00;
4. Key i, GO; i labeled by "I"	4. Key i, GO;
5. Key F, GO; F labeled by "F"	5. Key F, GO;
6. Key Y, GO; Y labeled by "Y"	6. Key Y, GO;
7. READ: D labeled by "D"	7. READ: D
8. OPTION: If you wish to change the number of years, Key Y, 01; READ: Y labeled by "Y" D labeled by "D"	8. OPTION: If you wish to change the number of years, Key Y, 01; READ: D

EXAMPLE: How much would you need to invest at 5.5% every month to provide a $12,000 college education for your one-year old son? (Assume college age is 18.).

1. Key PRIME, LOAD PROGRAM, VERIFY PROGRAM: Display should read 680	1. Key PRIME, LOAD PROGRAM, VERIFY PROGRAM: Display should read 692
2. Depress f(x), PRINTER ON;	2. Depress f(x);
3. Key 1 2 0 0 0, 00;	3. Key 1 2 0 0 0, 00;
4. Key 5 . 5 GO;	4. Key 5 . 5 GO;
5. Key 1 2 GO;	5. Key 1 2 GO;

© Wang Laboratories, Inc., 1970

PROGRAM TITLE	NUMBER
PERIODIC INVESTMENT	1056-2-BF2
	PAGE

6. Key 1 7 GO;

7. READ:

```
12000.00    A
  5.5000    I
     12.    F
   17.00    Y

   35.67    D
```

8. Suppose we change college age to 21 years old:

Key 2 0, 01;
READ:

```
20.00    Y

27.55    D
```

6. Key 1 7 GO;

7. READ: 35.67810082

8. Suppose we change college age to 21 years old:

Key 2 0, 01;
READ: 27.55147707

© Wang Laboratories, Inc., 1970

520/600 SERIES PROGRAM DESCRIPTION

TITLE	NO.
SUM FROM INVESTMENT	1057-2-BF2
	EQUIPMENT: 520-2/600-2

REGISTERS	MARKS	DATE	PROGRAMMER
00 - 04, 14	1000, 1001	March 18, 1971	James J. Gibson

BLOCK	VERIFY NO. – PRINT	NO. OF STEPS – PRINT	VERIFY NO. – DISPLAY	NO. OF STEPS – DISPLAY
19	657	55	669	55

PROGRAM DESCRIPTION:

This program finds the sum, A, that comes from the amount, D, invested at interest, i, F times a year for Y years.

$$A = D \left[\frac{1 + \left(\frac{i}{100 \cdot F} \right)^{Y \cdot F} - 1}{\frac{i}{100 \cdot F}} \right]$$

where:
- A = sum at the end of Y years
- D = end of period investment (payroll deduction)
- i = nominal annual interest (%)
- F = number of investments or deductions per year
- Y = number of years

© Wang Laboratories, Inc., 1972

Printed in U.S.A.

PROGRAM TITLE	NUMBER
SUM FROM INVESTMENT	1057-2-BF2
	PAGE

OPERATING PROCEDURE

PRINTER

1. Key PRIME, LOAD PROGRAM, VERIFY PROGRAM: Display should read 657
2. Depress f(x), PRINTER ON;
3. Key D, 00;
   D labeled by "D"
4. Key i, GO
   i labeled by "I"
5. Key F, GO;
   F labeled by "F"
6. Key Y, GO;
   Y labeled by "Y"
7. READ: A labeled by "A"
8. OPTION: If you wish to change the number of years,

   Key Y, 01;
   READ: Y labeled by "Y"
   A labeled by "A"

DISPLAY

1. Key PRIME, LOAD PROGRAM, VERIFY PROGRAM: Display should read 669
2. Depress f(x);
3. Key D, 00;
4. Key i, GO
5. Key F, GO;
6. Key Y, GO;
7. READ: A
8. OPTION: If you wish to change the number of years,

   Key Y, 01;
   READ: A

EXAMPLE: If your company invested your payroll deduction of $23.95 at 5.5%, how much would you have after 17 years?

1. Key PRIME, LOAD PROGRAM, VERIFY PROGRAM: Display should read 657
2. Depress f(x), PRINTER ON;
3. Key 2 3 . 9 5, 00;
5. Key 5 . 5, GO
5. Key 1 2, GO

1. Key PRIME, LOAD PROGRAM, VERIFY PROGRAM: Display should read 669
2. Depress f(x);
3. Key 2 3 . 9 5, 00;
4. Key 5 . 5, GO
5. Key 1 2, GO;

© Wang Laboratories, Inc., 1970

PROGRAM TITLE	NUMBER
SUM FROM INVESTMENT	1057-2-BF2
	PAGE

6. Key 1 7, GO;

7. READ:

23.95	D
5.5000	I
12.	F
17.00	Y
8056.49	A

8. Suppose your company invested the same payroll deduction for 20 years instead of 17:

Key 2 0, 01;
READ:

20.00	Y
10433.28	A

6. Key 1 7, GO;

7. READ: 8056.495559

8. Suppose your company invested the same payroll deduction for 20 years instead of 17:

Key 2 0, 01;
READ: 10433.28106

© Wang Laboratories, Inc., 1970

520/600 SERIES PROGRAM DESCRIPTION

TITLE	NO.
DECLINING BALANCE DEPRECIATION RATE	1058-2-BF1
	EQUIPMENT: 520-2/600-2
	DATE: March 18, 1971
	PROGRAMMER: James J. Gibson

REGISTERS	MARKS
01, 15	1000

BLOCK	VERIFY NO. – PRINT	NO. OF STEPS – PRINT	VERIFY NO. – DISPLAY	NO. OF STEPS – DISPLAY
20	442	31	434	31

PROGRAM DESCRIPTION

This program finds declining balance depreciation rate such that the book (listed) value of an item equals estimated salvage value at the end of an N year life.

$$f = 1 - \sqrt[N]{L/P}$$

where:

f = declining balance depreciation rate
N = life of study period in years
L = prospective net salvage value at end of N years
P = price or first cost

© Wang Laboratories, Inc., 1972

Printed in U.S.A.

PROGRAM TITLE	NUMBER
DECLINING BALANCE DEPRECIATION RATE	1058-2-BF1
	PAGE

OPERATING PROCEDURE

PRINTER

1. Key PRIME, LOAD PROGRAM, VERIFY PROGRAM: Display should read 442
2. Depress f(x), PRINTER ON;
3. Key P, GO;
   P labeled by "C"
4. Key L, GO
   L labeled by "L"
5. Key N, GO;
   N labeled by "M"
6. READ: f labeled by "F"

DISPLAY

1. Key PRIME, LOAD PROGRAM, VERIFY PROGRAM: Display should read 434
2. Depress f(x);
3. Key P, GO
4. Key L, GO;
5. Key N, GO;
6. READ: f

EXAMPLE: What declining balance depreciation rate would make the book value of a $25,000 computer exactly equal the prospective salvage value ($2000) at the end of a 15 year life?

1. Key PRIME, LOAD PROGRAM, VERIFY PROGRAM: Display should read 442
2. Depress f(x), PRINTER ON;
3. Key 2 5 0 0 0, 00
4. Key 2 0 0 0, GO
5. Key 1 5, GO
6. READ:

```
25000.00        C
 2000.00        L
   15.00        M

15.49689        F
```

1. Key PRIME, LOAD PROGRAM, VERIFY PROGRAM: Display should read 434
2. Depress f(x);
3. Key 2 5 0 0 0, 00
4. Key 2 0 0 0, GO
5. Key 1 5, GO
6. READ: 15.49689524

© Wang Laboratories, Inc., 1970

520/600 SERIES PROGRAM DESCRIPTION

TITLE	NO.
DEPRECIATION CHARGE (Declining Balance)	1059-2-BF1
	EQUIPMENT: 520-2/600-2

REGISTERS	MARKS	DATE	PROGRAMMER
01, 02, 03, 14, 15	1000	March 18, 1971	James J. Gibson

BLOCK	VERIFY NO. – PRINT	NO. OF STEPS – PRINT	VERIFY NO. – DISPLAY	NO. OF STEPS – DISPLAY
21	424	37	438	37

PROGRAM DESCRIPTION:

This program finds the depreciation charge, C_y in year Y for declining balance depreciation rate, f.

$$C_y = Pf(1 - f)^{Y - 1}$$

where

C_y = depreciation charge
P = price or first cost
f = declining balance depreciation rate
Y = age in years at the end of the year to be considered

© Wang Laboratories, Inc., 1972

Printed in U.S.A.

PROGRAM TITLE	NUMBER
DEPRECIATION CHARGE (Declining Balance)	1059-2-BF1
	PAGE

OPERATING PROCEDURE

PRINTER

1. Key PRIME, LOAD PROGRAM, VERIFY PROGRAM: Display should read 424
2. Depress f(x), PRINTER ON;
3. Key P, 00;
   P labeled by "C"
4. Key f, GO;
   f labeled by "F"
5. Key Y, GO;
   Y labeled by "Y"
6. READ: C_y labeled by "D"

DISPLAY

1. Key PRIME, LOAD PROGRAM, VERIFY PROGRAM: Display should read 438
2. Depress f(x);
3. Key P, 00;
4. Key f, GO;
5. Key Y, GO;
6. READ: C_y

EXAMPLE: What is the depreciation write-off in the ninth year for a $25,000 computer if the declining balance depreciation rate is 15.497%?

PRINTER

1. Key PRIME, LOAD PROGRAM, VERIFY PROGRAM: Display should read 424
2. Depress f(x), PRINTER ON;
3. Key 2 5 0 0 0, 00;
4. Key 1 5 . 4 9 7, GO;
5. Key 9, GO
6. READ:

```
25000.00        C
15.49700        F
    9.00        Y

 1007.31        D
```

DISPLAY

1. Key PRIME, LOAD PROGRAM, VERIFY PROGRAM: Display should read 438
2. Depress f(x);
3. Key 2 5 0 0 0, 00;
4. Key 1 5 . 4 9 7, GO;
5. Key 9, GO
6. READ: 1007.318585

© Wang Laboratories, Inc., 1970

520/600 SERIES PROGRAM DESCRIPTION

TITLE	NO.
SALVAGE VALUE (Book)	1060-2-BF1
	EQUIPMENT: 520-2/600-2

REGISTERS	MARKS	DATE	PROGRAMMER
15	1000	March 18, 1971	James J. Gibson

BLOCK	VERIFY NO. – PRINT	NO. OF STEPS – PRINT	VERIFY NO. – DISPLAY	NO. OF STEPS – DISPLAY
22	421	32	428	32

PROGRAM DESCRIPTION:

This program finds book of salvage value, L, at declining depreciation rate, f, at the end of N years.

$$L = P (1 - f)^N$$

where:

L = book of salvage value at the end of N years
P = price of first cost
f = declining balance depreciation rate
N = age of item in years

© Wang Laboratories, Inc., 1972

Printed in U.S.A.

PROGRAM TITLE	NUMBER
SALVAGE VALUE (Book)	1060-2-BF1
	PAGE

OPERATING PROCEDURE

PRINTER

1. Key PRIME, LOAD PROGRAM, VERIFY PROGRAM: Display should read 421
2. Depress f(x), PRINTER ON;
3. Key f, 00;
   f labeled by "F"
4. Key N, GO;
   N labeled by "Y"
5. Key P, GO
   P labeled by "C"
6. READ: L labeled by "L"

DISPLAY

1. Key PRIME, LOAD PROGRAM, VERIFY PROGRAM: Display should read 428
2. Depress f(x);
3. Key f, 00;
4. Key N, GO
5. Key P, GO
6. READ: L

EXAMPLE: What is the salvage value of a nine-year old $25,000 computer if the declining balance depreciation rate is 15.497%?

1. Key PRIME, LOAD PROGRAM, VERIFY PROGRAM: Display should read 421
2. Depress f(x), PRINTER ON;
3. Key 1 5 . 4 9 7, 00;
4. Key 9, GO;
5. Key 2 5 0 0 0, GO;
6. READ:

```
15.4970      F
 9.00        Y
25000.00     C

5492.74      L
```

1. Key PRIME, LOAD PROGRAM, VERIFY PROGRAM: Display should read 428
2. Depress f(x);
3. Key 1 5 . 4 9 7, 00;
4. Key 9, GO;
5. Key 2 5 0 0 0, GO;
6. READ: 5492.746432

© Wang Laboratories, Inc., 1970

520/600 SERIES PROGRAM DESCRIPTION

TITLE	NO.
DEPRECIATION (Sum of the Digits)	1061-2-BF1
	EQUIPMENT 520-2/600-2

REGISTERS	MARKS	DATE
00, 01, 02, 14, 15	1000	March 18, 1971
		PROGRAMMER James J. Gibson

BLOCK	VERIFY NO. – PRINT	NO. OF STEPS – PRINT	VERIFY NO. – DISPLAY	NO. OF STEPS – DISPLAY
23	493	40	514	40

PROGRAM DESCRIPTION:

This program calculates the depreciation for the year (t) when given the cost, useful life, and salvage value.

$$\text{Depreciation, } D = \frac{2(n-t+1)}{n(n+1)} \quad (C-S)$$

where:

t = year of depreciation
n = useful life
C = initial cost
S = salvage value

© Wang Laboratories, Inc., 1972

Printed in U.S.A.

PROGRAM TITLE	NUMBER
DEPRECIATION (sum of the digits)	1061-2-BF1
	PAGE

OPERATING PROCEDURE

PRINTER

1. Key PRIME, LOAD PROGRAM, VERIFY PROGRAM: Display should read 493
2. Depress f(x), PRINTER ON;
3. Key C, 00;
   C labeled by "C"
4. Key S, GO;
   S labeled by "X"
5. Key n, GO;
   n labeled by "L"
6. Key t, GO;
   t labeled by "Y"
7. READ: Depreciation, D
   D labeled by "D"

DISPLAY

1. Key PRIME, LOAD PROGRAM, VERIFY PROGRAM: Display should read 514
2. Depress f(x);
3. Key C, 00;
4. Key S, GO;
5. Key n, GO;
6. Key t, GO;
7. READ: Depreciation, D

EXAMPLE: What is the depreciation for the first year when the cost is $3500, the useful life 5 years, and the salvage value $800.

PRINTER

1. Key PRIME, LOAD PROGRAM, VERIFY PROGRAM: Display should read 493
2. Depress f(x), PRINTER ON;
3. Key 3 5 0 0, 00;
4. Key 8 0 0, GO;
5. Key 5, GO;

DISPLAY

1. Key PRIME, LOAD PROGRAM, VERIFY PROGRAM: Display should read 514
2. Depress f(x);
3. Key 3 5 0 0, 00;
4. Key 8 0 0, GO;
5. Key 5, GO;

© Wang Laboratories, Inc., 1970

PROGRAM TITLE	NUMBER
DEPRECIATION (sum of the digits)	1061-2-BF1
	PAGE

6. Key 1, GO;

7. READ:

3500.00	C
800.00	X
5.00	L
1.00	Y
900.00	D

6. Key 1, GO;

7. READ: 900.0049999

© Wang Laboratories, Inc., 1970

520/600 SERIES PROGRAM DESCRIPTION

TITLE	NO.
AVERAGE LIFE (ANNUAL)	1062-2-BF2
	EQUIPMENT: 520-2/600-2

REGISTERS	MARKS	DATE
00 - 15	0001-0004, 0006 1011, 1012, 1100, 1101	October, 1971
		PROGRAMMER: Marcia DeLeaco

BLOCK	VERIFY NO. – PRINT	NO. OF STEPS – PRINT	VERIFY NO. – DISPLAY	NO. OF STEPS – DISPLAY
24	2094	178	1809	154

Calculates the average life for bond issues with annual or semi-annual sinking fund retirements.

OPERATING PROCEDURE (ANNUAL)

PRINTER

1. Load block number 24;
2. Key VERIFY PROGRAM: Display should read 2094;
3. Depress f(x), PRINTER ON;
4. Key SETTLEMENT MONTH, Key 11
   Key SETTLEMENT DAY, Key GO,
   Key SETTLEMENT YEAR, Key GO,

   Settlement Month labeled by "M",
   Settlement Day labeled by "D",
   Settlement Year labeled by "Y";
5. Key MATURITY MONTH, Key GO,
   Key MATURITY DAY, Key GO,
   Key MATURITY YEAR, Key GO,

   Maturity Month labeled by "M"
   Maturity Day labeled by "D",
   Maturity Year labeled by "Y";

DISPLAY

1. Load block number 24;
2. Key VERIFY PROGRAM: Display should read 1809;
3. Depress f(x);
4. Key SETTLEMENT MONTH, Key 11
   Key SETTLEMENT DAY, Key GO,
   Key SETTLEMENT YEAR, Key GO;
5. Key MATURITY MONTH, Key GO,
   Key MATURITY DAY, Key GO,
   Key MATURITY YEAR, Key GO;

© Wang Laboratories, Inc., 1972

Printed in U.S.A.

6. Key NUMBER OF BONDS OUTSTANDING, Key GO, labeled by "B";

7. Key NUMBER OF DIFFERENT PERIODIC RETIREMENTS, Key GO, labeled by "D";

8. Key SINKING FUND PAYMENT, Key GO, labeled by "F";

9. Index date beginning sinking fund payment:

   Key MONTH, Key GO,
   Key DAY, Key GO,
   Key YEAR, Key GO;

10. Index date ending sinking fund payment:

    Key MONTH, Key GO,
    Key DAY, Key GO,
    Key YEAR, Key GO;

6. Key NUMBER OF BONDS OUTSTANDING, Key GO,

7. Key NUMBER OF DIFFERENT PERIODIC RETIREMENTS, Key GO;

8. Key SINKING FUND PAYMENT, Key GO;

9. Index date beginning sinking fund payment:

   Key MONTH, Key GO,
   Key DAY, Key GO,
   Key YEAR, Key GO;

10. Index date ending sinking fund payment:

    Key MONTH, Key GO,
    Key DAY, Key GO,
    Key YEAR, Key GO;

Repeat steps 8, 9 and 10 for all sinking fund payments.

READ: Average Life
labeled by "A";

READ: Average Life

EXAMPLE

SETTLEMENT DATE: 9/1/70
MATURITY DATE: 9/1/95
NO. OF BONDS OUTSTANDING: 20,000
NUMBER OF DIFFERENT PERIODIC PAYMENTS: 3

SINKING FUND PAYMENT	BEGINNING DATE	ENDING DATE
700	9/1/71	9/1/80
1000	9/1/81	9/1/87
1500	9/1/88	9/1/94

© Wang Laboratories, Inc. 1972

PROGRAM TITLE	NUMBER
AVERAGE LIFE (ANNUAL)	1062-2-BF2
	PAGE

1. Load block number 24;

2. Key VERIFY PROGRAM: Display should read 2094;

3. Key 9, Key 11
   Key 1, Key GO,
   Key 7 0, Key GO;

4. Key 9, Key GO,
   Key 1, Key GO,
   Key 9 5, Key GO;

5. Key 2 0 0 0 0, Key GO;

6. Key 3, Key GO;

7. Key 7 0 0, Key GO;

8. Key 9, Key GO,
   Key 1, Key GO,
   Key 7 1, Key GO;

9. Key 9, Key GO,
   Key 1, Key GO,
   Key 8 0, Key GO;

10. Key 1 0 0 0, Key GO;

11. Key 9, Key GO,
    Key 1, Key GO,
    Key 8 1, Key GO;

12. Key 9, Key GO,
    Key 1, Key GO,
    Key 8 7, Key GO;

13. Key 1 5 0 0, Key GO;

14. Key 9, Key GO,
    Key 1, Key GO,
    Key 8 8, Key GO;

1. Load block number 24;

2. Key VERIFY PROGRAM: Display should read 1809;

3. Key 9, Key 11
   Key 1, Key GO,
   Key 7 0, Key GO;

4. Key 9, Key GO,
   Key 1, Key GO;
   Key 9 5, Key GO;

5. Key 2 0 0 0 0, Key GO;

6. Key 3, Key GO;

7. Key 7 0 0, Key GO;

8. Key 9, Key GO,
   Key 1, Key GO,
   Key 7 1, Key GO;

9. Key 9, Key GO,
   Key 1, Key GO,
   Key 8 0, Key GO;

10. Key 1 0 0 0, Key GO;

11. Key 9, Key GO,
    Key 1, Key GO,
    Key 8 1, Key GO;

12. Key 9, Key GO,
    Key 1, Key GO,
    Key 8 7, Key GO;

13. Key 1 5 0 0, Key GO;

14. Key 9, Key GO,
    Key 1, Key GO,
    Key 8 8, Key GO;

© Wang Laboratories, Inc. 1972

15. Key 9, Key GO,
Key 1, Key GO,
Key 9 4, Key GO;

READ:

(See Printout on following page)

15. Key 9, Key GO,
Key 1, Key GO,
Key 9 4, Key GO;

READ: 12.225

© Wang Laboratories, Inc. 1972

PROGRAM TITLE	NUMBER
AVERAGE LIFE (ANNUAL)	1062-2-BF2
	PAGE

```
      9.    M
      1.    D
     70.    Y

      9.    M
      1.    D
     95.    Y

  20000.    B

      3.    D

    700.    F

      9.    M
      1.    D
     71.    Y

      9.    M
      1.    D
     80.    Y

   1000.    F

      9.    M
      1.    D
     81.    Y

      9.    M
      1.    D
     87.    Y

   1500.    F

      9.    M
      1.    D
     88.    Y

      9.    M
      1.    D
     94.    Y

  12.225    A
```

© Wang Laboratories, Inc. 1972

PROGRAM TITLE	NUMBER
AVERAGE LIFE (SEMI-ANNUAL)	1062-2-BF2
	PAGE

OPERATING PROCEDURE (SEMI-ANNUAL)

PRINTER

1. Load block number 24;

2. Key VERIFY PROGRAM: Display should read 2094;

3. Depress f(x), PRINTER ON;

4. Key SETTLEMENT MONTH, Key 12
   Key SETTLEMENT DAY, Key GO,
   Key SETTLEMENT YEAR, Key GO,

   Settlement Month labeled by "M",
   Settlement Day labeled by "D"
   Settlement Year labeled by "Y" ;

5. Key MATURITY MONTH, Key GO,
   Key MATURITY DAY, Key GO,
   Key MATURITY YEAR, Key GO,

   Maturity Month labeled by "M",
   Maturity Day labeled by "D",
   Maturity Year labeled by "Y";

6. Key NUMBER OF BONDS OUTSTANDING, Key GO,
   labeled by "B";

7. Key NUMBER OF DIFFERENT PERIODIC PAYMENTS, Key GO,
   labeled by "D";

8. Key SINKING FUND PAYMENT,
   Key GO; labeled by "F";

9. Index date beginning sinking fund payment:

   Key MONTH, Key GO,
   Key DAY, Key GO,
   Key YEAR, Key GO;

DISPLAY

1. Load block number 24;

2. Key VERIFY PROGRAM: Display should read 1809;

3. Depress f(x);

4. Key SETTLEMENT MONTH, Key 12
   Key SETTLEMENT DAY, Key GO,
   Key SETTLEMENT YEAR, Key GO;

5. Key MATURITY MONTH, Key GO,
   Key MATURITY DAY, Key GO,
   Key MATURITY YEAR, Key GO;

6. Key NUMBER OF BONDS OUTSTANDING, Key GO;

7. Key NUMBER OF DIFFERENT PERIODIC PAYMENTS, Key GO;

8. Key SINKING FUND PAYMENT,
   Key GO;

9. Index date beginning sinking fund payment:

   Key MONTH, Key GO,
   Key DAY, Key GO,
   Key YEAR, Key GO;

© Wang Laboratories, Inc. 1972

PROGRAM TITLE	NUMBER
AVERAGE LIFE (SEMI-ANNUAL)	1062-2-BF2
	PAGE

10. Index date ending sinking fund payment:

    Key MONTH, Key GO,
    Key DAY, Key GO,
    Key YEAR, Key GO;

Repeat steps 8, 9 and 10 for all sinking fund payments.

READ: Average Life
labeled by "A"

10. Index date ending sinking fund payment:

    Key MONTH, Key GO,
    Key DAY, Key GO,
    Key YEAR, Key GO;

READ: Average Life

EXAMPLE

SETTLEMENT DATE: 9/1/70
MATURITY DATE: 9/1/81
NUMBER OF BONDS: 325
NUMBER OF DIFFERENT PERIODIC RETIREMENTS: 3

SINKING FUND PAYMENT	BEGINNING DATE	ENDING DATE
15	9/1/71	9/1/73
20	3/1/74	9/1/77
12	3/1/78	9/1/80

1. Load block number 24;

2. Key VERIFY PROGRAM: Display should read 2094;

3. Key 9, Key 12
   Key 1, Key GO,
   Key 7 0, Key GO;

4. Key 9, Key GO,
   Key 1, Key GO,
   Key 8 1, Key GO;

5. Key 3 2 5, Key GO;

6. Key 3, Key GO;

7. Key 1 5, Key GO;

1. Load block number 24;

2. Key VERIFY PROGRAM: Display should read 1809;

3. Key 9, Key 12
   Key 1, Key GO,
   Key 7 0, Key GO;

4. Key 9, Key GO,
   Key 1, Key GO,
   Key 8 1, Key GO;

5. Key 3 2 5, Key GO;

6. Key 3, Key GO;

7. Key 1 5, Key GO;

© Wang Laboratories, Inc. 1972

8. Key 9, Key GO,
   Key 1, Key GO,
   Key 7 1, Key GO;

9. Key 9, Key GO,
   Key 1, Key GO,
   Key 7 3, Key GO;

10. Key 2 0, Key GO;

11. Key 3, Key GO,
    Key 1, Key GO,
    Key 7 4, Key GO;

12. Key 9, Key GO,
    Key 1, Key GO,
    Key 7 7, Key GO;

13. Key 1 2, Key GO;

14. Key 3, Key GO,
    Key 1, Key GO,
    Key 7 8, Key GO;

15. Key 9, Key GO,
    Key 1, Key GO,
    Key 8 0, Key GO;

READ:

(See Printout on following page)

8. Key 9, Key GO,
   Key 1, Key GO,
   Key 7 1, Key GO;

9. Key 9, Key GO,
   Key 1, Key GO,
   Key 7 3, Key GO;

10. Key 2 0, Key GO;

11. Key 3, Key GO,
    Key 1, Key GO,
    Key 7 4, Key GO;

12. Key 9, Key GO,
    Key 1, Key GO,
    Key 7 7, Key GO;

13. Key 1 2, Key GO;

14. Key 3, Key GO,
    Key 1, Key GO,
    Key 7 8, Key GO;

15. Key 9, Key GO,
    Key 1, Key GO,
    Key 8 0, Key GO;

READ: 5.594

© Wang Laboratories, Inc. 1972

PROGRAM TITLE	NUMBER
AVERAGE LIFE (SEMI-ANNUAL)	1062-2-BF2
	PAGE

```
    9.    M
    1.    D
   70.    Y

    9.    M
    1.    D
   81.    Y

  325.    B

    3.    D

   15.    F

    9.    M
    1.    D
   71.    Y

    9.    M
    1.    D
   73.    Y

   20.    F

    3.    M
    1.    D
   74.    Y

    9.    M
    1.    D
   77.    Y

   12.    F

    3.    M
    1.    D
   78.    Y

    9.    M
    1.    D
   80.    Y

5.594     A
```

© Wang Laboratories, Inc. 1972

520/600 SERIES PROGRAM DESCRIPTION

TITLE	NO.
BASIC EE DEMO	1063-2-EE2
	EQUIPMENT: 520-2/600-2
REGISTERS: 14, 15	MARKS: 1000 - 1015, 1100, 1101
	DATE: February 3, 1971
	PROGRAMMER: James J. Gibson

BLOCK	VERIFY NO. – PRINT	NO. OF STEPS – PRINT	VERIFY NO. – DISPLAY	NO. OF STEPS – DISPLAY
25	3868	283	3786	283

PROGRAM DESCRIPTION:

This program contains a general sampling of various concepts in electrical engineering.

The following is a list of the content and purpose of each subroutine contained in this program:

f(x)	TITLE	PURPOSE	EQUATION
00	Angular frequency, ω	Calculates ω from frequency, f	$\omega = 2\pi f$
01	Capacitive Reactance, X_C	Calculates X_C from frequency, f and capacitance, C	$X_C = \frac{1}{2\pi fC}$
02	Inductive Reactance, X_L	Calculates X_L from frequency, f and inductance L	$X_L = 2\pi fL$
03	Power Gain (db), α	Calculates α from power ratio P_1/P_2	$\alpha = 10 LOG_{10}\left(\frac{P_1}{P_2}\right)$
04	Power Ratio, P_1/P_2	Calculates P_1/P_2 from power gain, α	$P_1/P_2 = 10^{\alpha/10}$
05	Wavelength, λ_o	Calculates λ_o from frequency, f and velocity of light, c	$\lambda_o = c/f$
06	Phase constant, β (phase shift per unit length)	Calculates β from resonant frequency, f_o and velocity of light, c	$\beta = \frac{2\pi f_o}{c}$

© Wang Laboratories, Inc., 1972

Printed in U.S.A.

PROGRAM TITLE	NUMBER
BASIC EE DEMO	1063-2-EE2
	PAGE

CONTINUED

f(x)	TITLE	PURPOSE	EQUATION
07	Resonant frequency, f_o	Calculates f_o from inductance, L and capacitance, C	$f_o = \frac{1}{2\pi\sqrt{LC}}$
08	Co-Axial Line Impedance, Z_o	Calculates Z_o from larger radial distance, b and smaller radial distance, a	$Z_o = 138.2 \text{LOG}_{10}\left(\frac{b}{a}\right)$
09	Line Inductance, L_l	Calculates L_l from line impedance, Z_o and velocity of light, c	$L_l = Z_{o/c}$
10	Reflection Coefficient $\lvert\Gamma\rvert$	Calculates $\lvert\Gamma\rvert$ from voltage standing ratio, ρ	$\lvert\Gamma\rvert = \frac{\rho-1}{\rho+1}$
11	Voltage standing wave ratio, ρ	Calculates ρ from reflection coefficient $\lvert\Gamma\rvert$	$\rho = \frac{1+\lvert\Gamma\rvert}{1-\lvert\Gamma\rvert}$
12	Waveguide wavelength λ_g	Calculates λ_g from free space wavelength, λ and separation of guide, a	$\lambda_g = \frac{\lambda}{\sqrt{1-(\lambda/2a)^2}}$
13	Transmission loss, T_L	Calculates T_L from voltage standing ratio, ρ	$T_L = 10\text{LOG}_{10}\left[1-\left(\frac{\rho-1}{\rho+1}\right)^2\right]$
14	Return Loss, R_L	Calculates R_L from voltage standing ratio, ρ	$R_L = 10\text{LOG}_{10}\left[\frac{\rho-1}{\rho+1}\right]$
15	Rectangular wave guide (loss beyond cut-off) α_L	Calculates α_L from cut-off frequency, f_c, resonant frequency, f_o, and velocity of light, c	$\alpha_L = \frac{54.6}{\lambda_o}\sqrt{1-\left(\frac{f_o}{f_c}\right)^2}$

© Wang Laboratories, Inc., 1970

PROGRAM TITLE	NUMBER
BASIC E. E. DEMO	1063-2-EE2
	PAGE

GENERAL OPERATING PROCEDURE:

The general operating instructions for use of any one or more of subroutines 00 - 15 are the following:

PRINTER

1. Key PRIME, LOAD PROGRAM, VERIFY PROGRAM: Display should read 3868
2. Depress f(x);
3. Depress PRINTER ON;

DISPLAY

1. Key PRIME, LOAD PROGRAM, VERIFY PROGRAM: Display should read 3786
2. Depress f(x);

The individual operating instructions for each subroutine are on the following pages:

© Wang Laboratories, Inc., 1970

PROGRAM TITLE	NUMBER
BASIC E.E. DEMO	1063-2-EE2
	PAGE

ANGULAR FREQUENCY

f(x) 00

$\omega = 2\pi f$

ω = angular frequency (cps)

f = frequency (cps)

OPERATING PROCEDURE

PRINTER

1. Key f;

   f labeled by "F"

2. Key 00;

3. READ: ω labeled by "A"

DISPLAY

1. Key f;

2. Key 00;

3. READ: ω

EXAMPLE: Calculate ω for f = 1000 cps.

1. Key 1 0 0 0;

2. Key 00;

3. READ:

   1000.00 F
   6283.1853 A

1. Key 1 0 0 0;

2. Key 00;

3. READ: 6283.185307

© Wang Laboratories, Inc., 1970

PROGRAM TITLE	NUMBER
BASIC E. E. DEMO	1063-2-EE2
	PAGE

CAPACITIVE REACTANCE

f(x) 01

$$X_C = \frac{1}{2\pi f C}$$

X_C = Capacitive reactance

f = frequency (cps)

C = Capacitance (farads)

OPERATING PROCEDURE

PRINTER	DISPLAY
1. Key f;	1. Key f;
f labeled by "F"	
2. Key 01;	2. Key 01;
3. Key C, GO;	3. Key C, GO;
C labeled by "C"	
4. READ: X_C labeled by "X"	4. READ: X_C

EXAMPLE: Calculate X_C for f = 100 cps and C = .0000005 farads

1. Key 1 0 0;	1. Key 1 0 0;
2. Key 01;	2. Key 01;
3. Key . 0 0 0 0 0 0 5, GO;	3. Key . 0 0 0 0 0 0 5, GO;
4. READ:	4. READ: 3183.098861

```
     100.00          F
5.000000000 -07      C
3.183098861 +03      X
```

© Wang Laboratories, Inc., 1970

PROGRAM TITLE	NUMBER
BASIC E.E. DEMO	1063-2-EE2
	PAGE

INDUCTIVE REACTANCE

f(x) 02

$X_L = 2\pi fL$

X_L = inductive reactance

f = frequency

L = inductance (henries)

OPERATING PROCEDURE

PRINTER	DISPLAY
1. Key f;	1. Key f;
f labeled by "F"	
2. Key 02;	2. Key 02;
3. Key L, GO;	3. Key L, GO;
L labeled by "L"	
4. READ: X_L labeled by "X"	4. READ: X_L

EXAMPLE: Calculate X_L for f = 1000 cps and L = .05 henry.

1. Key 1 0 0 0;	1. Key 1 0 0 0;
2. Key 02;	2. Key 02;
3. Key . 0 5, GO;	3. Key . 0 5, GO;
4. READ:	4. READ: 314.1592653

```
     1000.00          F
5.000000000 -02       L
3.141592653 +02       X
```

© Wang Laboratories, Inc., 1970

POWER GAIN (db)

f(x) 03

$\alpha = 10 \text{ Log}_{10} (P_1/P_2)$

α = power gain (db)

$\frac{P_1}{P_2}$ = power ratio

OPERATING PROCEDURE

PRINTER	DISPLAY
1. Key P_1/P_2;	1. Key P_1/P_2;
P_1/P_2 labeled by "I"	
2. Key 03;	2. Key 03;
3. READ: α labeled by "G"	3. READ: α

EXAMPLE: Calculate α for $P_1/P_2 = 15$.

1. Key 1 5;	1. Key 1 5;
2. Key 03;	2. Key 03;
3. READ:	3. READ: 11.76091259
15.00000 I	
11.76091 G	

© Wang Laboratories, Inc., 1970

PROGRAM TITLE	NUMBER
BASIC E.E. DEMO	1063-2-EE2
	PAGE

POWER RATIO
f(x) 04

$P_1/P_2 = 10^{\alpha/10}$

P_1/P_2 = power ratio

α = power gain (db)

OPERATING PROCEDURE

PRINTER

1. Key α;

   α labeled by "G"

2. Key 04;

3. READ: P_1/P_2 labeled by "I"

DISPLAY

1. Key α;

2. Key 04;

3. READ: P_1/P_2

EXAMPLE: Calculate P_1/P_2 for $\alpha = 12$.

1. Key 1 2;

2. Key 04;

3. READ:

```
12.00000        G
15.84893        I
```

1. Key 1 2;

2. Key 04;

3. READ: 15.84893192

© Wang Laboratories, Inc., 1970

WAVELENGTH
f(x) 05

$\lambda_o = c/f$

λ_o = wavelength (cm)

c = velocity of light (3×10^{10} cm/sec)

f = frequency (cps)

OPERATING PROCEDURE

PRINTER	DISPLAY
1. Key f; f labeled by "F"	1. Key f;
2. Key 05;	2. Key 05;
3. READ: λ_o labeled by "L"	3. READ: λ_o

EXAMPLE: Calculate λ_o for f = 100000 cps.

1. Key 1 0 0 0 0 0;	1. Key 1 0 0 0 0 0;
2. Key 05;	2. Key 05;
3. READ:	3. READ: 300000.000

```
  100000.00          F
3.000000000 +05      L
```

© Wang Laboratories, Inc., 1970

PROGRAM TITLE	NUMBER
BASIC E.E. DEMO	1063-2-EE2
	PAGE

PHASE CONSTANT
(Phase shift per unit length)
f(x) 06

$$\beta = \frac{2\pi f_0}{c}$$

β = phase constant $(\frac{1}{cm})$

f_0 = resonant frequency (cps)

c = velocity of light $(3 \times 10^{10} cm/sec)$

OPERATING PROCEDURE

PRINTER

1. Key f_0;
   f_0 labeled by "F"
2. Key 06;
3. READ: β labeled by "B"

DISPLAY

1. Key f_0;
2. Key 06;
3. READ: β

EXAMPLE: Calculate for $f_0 = 1000000$

PRINTER

1. Key 1000000;
2. Key 06;
3. READ:

```
1000000.000          F
2.094395102 -04      B
```

DISPLAY

1. Key 1000000;
2. Key 06;
3. READ: .0002094395

© Wang Laboratories, Inc., 1970

PROGRAM TITLE	NUMBER
BASIC E.E. DEMO	1063-2-EE2
	PAGE

RESONANT FREQUENCY
f(x) 07

$$f_0 = \frac{1}{2\pi\sqrt{LC}}$$

f_0 = resonant frequency

L = inductance (henries)

C = capacitance (farads)

OPERATING PROCEDURE

PRINTER	DISPLAY
1. Key L;	1. Key L;
L labeled by "L"	
2. Key 07;	2. Key 07;
3. Key C , GO;	3. Key C , GO;
C labeled by "C"	
4. READ: F_0 Labeled by "F"	4. READ: F_0

EXAMPLE: Calculate f_0 for L = .05 and C = .000005

1. Key . 0 5;	1. Key . 0 5;
2. Key 07;	2. Key 07;
3. Key . 0 0 0 0 0 5;	3. Key . 0 0 0 0 0 5;
4. READ:	4. READ: 318.3098861

```
5.000000000 -02    L
5.000000000 -06    C
3.183098861 +02    F
```

© Wang Laboratories, Inc., 1970

PROGRAM TITLE	NUMBER
BASIC E. E. DEMO	1063-2-EE2
	PAGE

CO-AXIAL LINE IMPEDANCE

f(x) 08

$Z_0 = 138.2 \text{ Log}_{10}(^b/_a)$

Z_0 = impedance (ohms)

b = larger radial distance (cm or inches)

a = smaller radial distance (cm or inches)

OPERATING PROCEDURE

PRINTER

1. Key b;

   b labeled by "B"

2. Key 08;

3. Key a , GO;

   a labeled by "A"

4. READ: Z_0 Labeled by "Z"

DISPLAY

1. Key b;

2. Key 08;

3. Key a , GO;

4. READ: Z_0

EXAMPLE: Calculate Z_0 for b = 4 and a = 3.75

1. Key 4;

2. Key 08;

3. Key 3.75 , GO;

4. READ:

```
4.000     B
3.750     A
3.8735    Z
```

1. Key 4;

2. Key 08;

3. Key 3.75 , GO;

4. READ: 3.873569601

© Wang Laboratories, Inc., 1970

PROGRAM TITLE	NUMBER
BASIC E. E. DEMO	1063-2-EE2
	PAGE

LINE INDUCTANCE
f(x) 09

$L_l = Z_o/c$

Z_o = line impedance (ohms)

L_l = inductance/cm (henries)

c = velocity of light (3×10^{10} cm)

OPERATING PROCEDURE

PRINTER	DISPLAY
1. Key Z_o; Z_o labeled by "Z"	1. Key Z_o;
2. Key 09;	2. Key 09;
3. READ: L_l labeled by "L"	3. READ: L_l

EXAMPLE: Calculate L_l for $Z_o = 3.75$

1. Key 3 . 7 5;	1. Key 3 . 7 5;
2. Key 09;	2. Key 09;
3. READ:	3. READ: 1.250000000 - 10

```
      3.7500          Z
1.250000000 -10       L
```

© Wang Laboratories, Inc., 1970

PROGRAM TITLE	NUMBER
BASIC E. E. DEMO	1063-2-EE2
	PAGE

REFLECTION COEFFICIENT

f(x) 10

$$|\Gamma| = \frac{\rho - 1}{\rho + 1}$$

$|\Gamma|$ = reflection coefficient

ρ = voltage standing wave ratio

OPERATING PROCEDURE

PRINTER	DISPLAY
1. Key ρ;	1. Key ρ;
ρ labeled by "I"	
2. Key 10;	2. Key 10;
3. READ: $\lvert\Gamma\rvert$ labeled by "C"	3. READ: $\lvert\Gamma\rvert$

EXAMPLE: Calculate $|\Gamma|$ for $\rho = 3.77$.

1. Key 3 . 7 7;	1. Key 3 . 7 7;
2. Key 10;	2. Key 10;
3. READ:	3. READ: .5807127882

3.7700 I
.5807 C

© Wang Laboratories, Inc., 1970

PROGRAM TITLE	NUMBER
BASIC E. E. DEMO	1063-2-EE2
	PAGE

VOLTAGE STANDING WAVE RATIO

f(x) 11

$$\rho = \frac{1 + |\Gamma|}{1 - |\Gamma|}$$

ρ = voltage standing wave ratio

$|\Gamma|$ = reflection coefficient

OPERATING PROCEDURE

PRINTER

1. Key $|\Gamma|$;

   $|\Gamma|$ labeled by "C"

2. Key 11;

3. READ: ρ labeled by "I"

DISPLAY

1. Key $|\Gamma|$;

2. Key 11;

3. READ: ρ

EXAMPLE: Calculate ρ for $|\Gamma| = .755$.

1. Key . 7 5 5;

2. Key 11;

3. READ:

.7550 C
7.1632 I

1. Key . 7 5 5;

2. Key 11;

3. READ: 7.163265306

© Wang Laboratories, Inc., 1970

PROGRAM TITLE	NUMBER
BASIC E. E. DEMO	1063-2-EE2
	PAGE

WAVEGUIDE WAVELENGTH, λ_g

f(x) 12

$$\lambda_g = \frac{\lambda}{\sqrt{1 - \left(\frac{\lambda}{2a}\right)^2}}$$

f = frequency

λ = free space wavelength

a = separation of guide (cm)

Note: It is possible that $\frac{\lambda}{2a} > 1$ if f is low, therefore $f > \frac{c}{2a}$

OPERATING PROCEDURE

PRINTER	DISPLAY
1. Key f (in megacycles); f labeled by "F"	1. Key f (in megacycles);
2. Key 12;	2. Key 12;
3. Key a, GO; a labeled by "A"	3. Key a, GO;
4. READ: λ_g labeled by "L"	4. READ: λ_g

EXAMPLE: Calculate λ_g for f = 1000 megacycles and a = 20 cm.

1. Key 1 0 0 0;	1. Key 1 0 0 0;
2. Key 12;	2. Key 12;
3. Key 2 0, GO;	3. Key 2 0, GO;
4. READ:	4. READ: 45.35573676

```
1.000000000 +09    F
    20.0000        A
4.535573676 +01    L
```

© Wang Laboratories, Inc., 1970

PROGRAM TITLE	NUMBER
BASIC E.E. DEMO	1063-2-EE2
	PAGE

TRANSMISSION LOSS

f(x) 13

$$T_L = 10 \text{ Log}_{10} \left[1 - \left(\frac{\rho - 1}{\rho + 1} \right)^2 \right]$$

T_L = transmission loss

ρ = voltage standing wave ratio

OPERATING PROCEDURE

PRINTER	DISPLAY
1. Key ρ;	1. Key ρ;
ρ labeled by "C"	
2. Key 13;	2. Key 13;
3. READ: T_L labeled by "L"	3. READ: T_L

EXAMPLE: Calculate T_L for $\rho = 5.55$.

1. Key 5 . 5 5;	1. Key 5 . 5 5;
2. Key 13;	2. Key 13;
3. READ:	3. READ: -2.861296255
5.55000 C -2.861296 L	

© Wang Laboratories, Inc., 1970

PROGRAM TITLE	NUMBER
BASIC E.E. DEMO	1063-2-EE2
	PAGE

RETURN LOSS
f(x) 14

$$R_L = 10 \text{ Log}_{10} \left[\left(\frac{\rho - 1}{\rho + 1} \right)^2 \right]$$

R_L = return loss

ρ = voltage standing wave ratio

OPERATING PROCEDURE

PRINTER

1. Key ρ;

   ρ labeled by "C"

2. Key 14;

3. READ: R_L labeled by "L"

DISPLAY

1. Key ρ;

2. Key 14;

3. READ: R_L

EXAMPLE:

1. Key 5 . 5 5;

2. Key 14;

3. READ:

```
   5.5500        C
-3.164598        L
```

1. Key 5 . 5 5;

2. Key 14;

3. READ: -3.164598066

© Wang Laboratories, Inc., 1970

PROGRAM TITLE

BASIC E.E. DEMO

NUMBER 1063-2-EE2

PAGE

RECTANGULAR WAVE GUIDE
(Loss beyond cut-off)

f(x) 15

$$\alpha_L = \frac{54.6}{\lambda_c}\sqrt{1-\left(\frac{f_o}{f_c}\right)^2}$$

$$f_o \leq f_c$$

$\lambda_c = c/f_c$

f_c = cut-off frequency (cps)

f_o = resonant frequency (cps)

c = velocity of light (3×10^{10} cm/sec)

α_L = Loss beyond cut-off (db/cm)

OPERATING PROCEDURE

PRINTER

1. Key f_o;

   f_o labeled by "F"

2. Key 15;

3. Key f_c, GO;

4. READ: α_L labeled by "L"

EXAMPLE: Calculate α_L for f_o = 1000 cps and f_c = 2000 cps.

1. Key 1 0 0 0;

2. Key 15;

3. Key 2 0 0 0, GO;

4. READ:

```
1.000000000 +03    F
2.000000000 +03    C
3.152332469 -06    L
```

DISPLAY

1. Key f_o;

2. Key 15;

3. Key f_c, GO;

4. READ: α_L

1. Key 1 0 0 0;

2. Key 15;

3. Key 2 0 0 0, GO;

4. READ: .0000031523

© Wang Laboratories, Inc., 1970

COMBINING SUBROUTINES

Even if the printer is used, the answers appear in the display; thus, we can use the output or results of one calculation as input or data for making another calculation. For instance, we can use:

1) output of 07 in 06;
2) output of 08 in 09;
3) output of 11 in 13 or 14;
4) output of 07 in 15

EXAMPLE: Suppose you have $|\Gamma|$ of .53 and want to find T_L.

Key . 5 3, 11; READ: $\rho = 3.2553$

Key 13, READ: $T_L = -1.432107$

Sample output below,

```
     .5300          C
    3.2553          I

    3.25531         C
   -1.432107        L
```

© Wang Laboratories, Inc., 1970

520/600 SERIES PROGRAM DESCRIPTION

TITLE	NO.
DESIGN E. E. DEMO A	1064-2-EE2
	EQUIPMENT: 520-2/600-2
REGISTERS: 00-06, 14, 15	MARKS: 1000-1004, 1013, 1014, 1015, 1100, 1103
	DATE: February 5, 1971
	PROGRAMMER: James J. Gibson

BLOCK	VERIFY NO. – PRINT	NO. OF STEPS – PRINT	VERIFY NO. – DISPLAY	NO. OF STEPS – DISPLAY
26	4067	304	4041	304

PROGRAM DESCRIPTION:

This program calculates the attenuation and/or the value of resistive elements of attenuator pads of various configurations.

The following is a list of the content and purpose of each subroutine contained in this program:

f(x)	TITLE	PURPOSE	EQUATIONS
00	Loss for Minimum Attentuation Pads, A(db)	Calculates minimum A(db) from impedances to be matched, Z_1 and Z_2	$A(db) = 20\,(\text{Log}_{10}e)\left[\cosh^{-1}\left(\sqrt{\frac{Z_1}{Z_2}}\right)\right]$
01	Tchebysheff Evaluation	Calculates A(db) from frequency at which response is to be found, f_i, corner frequency, f_o, filter order, m, and pass band ripple, ϵ db.	$A(db) = 10\,\text{Log}_{10}\left[1 + \epsilon^2\, T_m^2\,(\Omega)\right]$
02	Minimum Attenuation Pads	Calculates resistive minimum loss pads for both balanced and unbalanced circuits	$R_A = Z_1\sqrt{1 - Z_2/Z_1}$ $R_B = Z_2/\sqrt{1 - Z_2/Z_1}$
03	Attenuator Pads "T" or "H"	Calculates resistor values for "T" or "H" type attenuator pads.	$R_B = \sqrt{Z_1/Z_2/\sinh(\theta)}$ $R_A = \frac{Z_1}{\tanh(\theta)} - R_B$ $R_C = \frac{Z_2}{\tanh(\theta)} - R_B$

© Wang Laboratories, Inc., 1972

Printed in U.S.A.

PROGRAM TITLE	NUMBER
DESIGN E. E. DEMO A	1064-2-EE2
	PAGE

04	Attenuator Pads, "π" or "θ"	Calculates resistor values for "π" or "θ" type attenuator pads.	$R_A = \sqrt{Z_1 Z_2}\ \sinh(\theta)$ $R_C = \frac{Z_1 R_A \tanh(\theta)}{[(R_A - Z_1 \tanh(\theta)]}$ $R_B = \frac{Z_2 R_A \tanh(\theta)}{[R_A - Z_2 \tanh(\theta)]}$

GENERAL OPERATING PROCEDURE:

The general operating instructions for use of any one or more of subroutines 00 - 04 are the following:

PRINTER

1. Key PRIME, LOAD PROGRAM, PROGRAM: Display should read 4067;
2. Depress f(x);
3. Depress PRINTER ON;

DISPLAY

1. Key PRIME, LOAD PROGRAM, VERIFY PROGRAM: Display should read 4041;
2. Depress f(x);

The individual instructions for each subroutine are on the following pages.

© Wang Laboratories, Inc., 1970

PROGRAM TITLE	NUMBER
DESIGN E. E. DEMO A	1064-2-EE2
	PAGE

LOSS (db) for MINIMUM LOSS PADS

f(x) 00

$$A(db) = 20(\text{Log}_{10}e)\left[\text{Cosh}^{-1}\left(\sqrt{Z_1/Z_2}\right)\right]$$

$$(Z_1 > Z_2)$$

Z_1, Z_2 = impedances to be matched (ohms)

OPERATING PROCEDURE

PRINTER	DISPLAY
1. Key Z_1;	1. Key Z_1;
Z_1 labeled by "Z"	
2. Key 00;	2. Key 00;
3. Key Z_2, GO;	3. Key Z_2, GO;
Z_2 labeled by "Y"	
4. READ: A(db) labeled by "L"	4. READ: A(db)

EXAMPLE: Calculate A for Z_1 = 93 ohms and Z_2 = 8 ohms

1. Key 9 3;	1. Key 9 3;
2. Key 00;	2. Key 00;
3. Key 8, GO;	3. Key 8, GO;
4. READ:	4. READ: 16.48140531

```
93.0000    Z
 8.0000    Y
16.4814    L
```

© Wang Laboratories, Inc., 1970

PROGRAM TITLE	NUMBER
DESIGN E. E. DEMO A	1064-2-FE2
	PAGE

TCHEBYSHEFF EVALUATION

f(x) 01

$A(db) = 10 \text{ Log}_{10} \left[1 + \epsilon^2 T_m^2 (\Omega)\right]$

$\epsilon^2 = 10^{.1\,\epsilon db} - 1$

$\Omega = f_i / f_o$

$T_m = \text{Cos}(m \text{ Cos}^{-1}(\Omega))$ if $\Omega < 1$

$T_m = \text{Cosh}(m \text{ Cosh}^{-1}(\Omega))$ if $\Omega \geq 1$

f_i = frequency at which response is to be found (cps)

f_o = corner frequency (cps)

m = filter order

ϵdb = pass band ripple (db)

OPERATING PROCEDURE

PRINTER

1. Key f_i;

   f_i labeled by "F"

2. Key 01;

3. Key f_o, GO;

   f_o labeled by "C"

4. Key ϵdb, GO;

   ϵdb labeled by "E"

5. Key m, GO;

   m labeled by "M"

DISPLAY

1. Key f_i;

2. Key 01;

3. Key f_o, GO;

4. Key ϵdb, GO;

5. Key m, GO;

© Wang Laboratories, Inc., 1970

PROGRAM TITLE	NUMBER
DESIGN E.E. DEMO A	1064-2-EE2
	PAGE

6. READ: A for m labeled by "A"

7. (optional)
If you key GO, you increment m by 1 and re-evaluate A for m+1 order of filter.

Key GO
READ: m+1 labeled by "M"
A for m+1 labeled by "A"

Key GO
READ: m+2 labeled by "M"
A for m+2 labeled by "A"
etc.

6. READ: A for m

7. (optional)
If you key GO, you increment m by 1 and re-evaluate A for m+1 order of filter

Key GO
READ: A for m+1

Key GO
READ: A for m+2
etc.

EXAMPLE: Calculate A for m=3 where f_i = 2000 cps, f_o = 1000 cps and ϵdb = 1 db

1. Key 2 0 0 0;

2. Key 01;

3. Key 1 0 0 0;

4. Key 1, GO;

5. Key 3, GO;

6. READ:

```
2.000000000  +03    F
1.000000000  +03    C
     1.0000         E

   3.000000         M
  22.455955         A

   4.000000         M
  33.868963         A

   5.000000         M
  45.306046         A
```

1. Key 2 0 0 0;

2. Key 01;

3. Key 1 0 0 0;

4. Key 1, GO;

5. Key 3, GO;

6. READ: 22.45595517

7. (optional) Key GO;
READ: 33.86896372 GO;
45.30604615

© Wang Laboratories, Inc., 1970

PROGRAM TITLE	NUMBER
DESIGN E. E. DEMO A	1064-2-EE2
	PAGE

MINIMUM ATTENUATOR PADS

f(x) 02

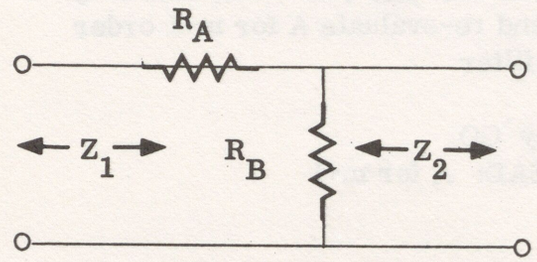

UNBALANCED

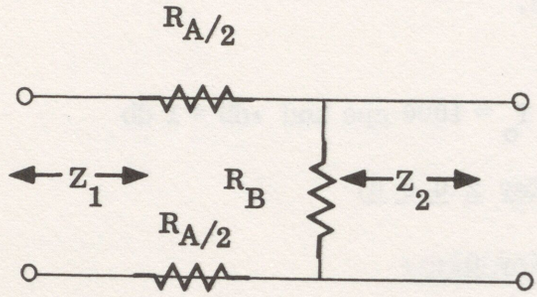

BALANCED

Calculates resistive minimum loss pads for both balanced and unbalanced circuits.

$$R_A = Z_1 \sqrt{1 - Z_{2/Z_1}} \quad Z_1 > Z_2$$

$$R_B = Z_2 / \sqrt{1 - Z_{2/Z_1}}$$

A(db) = attenuation minimum (see subroutine 00 for equation)

Z_1, Z_2 = Impedances to be matched

R_A, R_B = resistor values (ohms)

OPERATING PROCEDURE

PRINTER

1. Key Z_1;

   Z_1 labeled by "Z"
2. Key 02;
3. Key Z_2, GO;

DISPLAY

1. Key Z_1;
2. Key 02;
3. Key Z_2, GO;

© Wang Laboratories, Inc., 1970

4. READ: A(db) labeled by "L"
R_A labeled by "A"
R_B labeled by "B"

4. READ: A(db), GO,
R_A, GO,
R_B

EXAMPLE: Calculate R_A and R_B for Z_1 = 93 ohms and Z_2 = 50 ohms.

1. Key 9 3;

2. Key 02;

3. Key 5 0, GO;

4. READ:

93.0000 Z
50.0000 Y
7.2011 L

63.2376470 A
73.5321476 B

1. Key 9 3;

2. Key 02;

3. Key 5 0, GO;

4. READ: 7.201184265, GO,
63.23764701, GO,
73.53214769

© Wang Laboratories, Inc., 1970

PROGRAM TITLE	NUMBER
DESIGN E. E. DEMO A	1064-2-EE2
	PAGE

ATTENUATOR PADS, "T" or "H"

f(x) 03

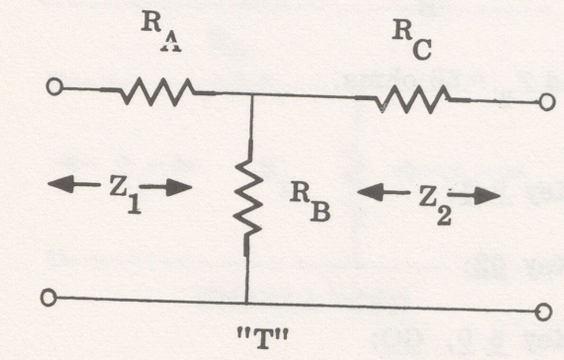

"T"

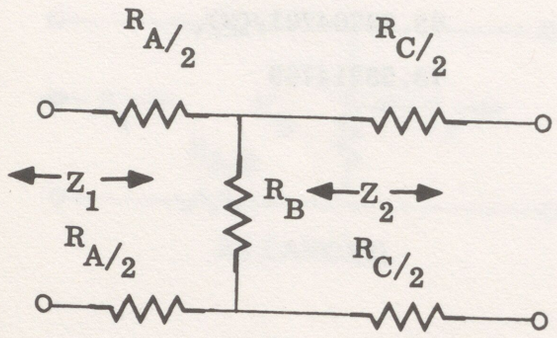

"H"

Calculates resistor values for "T" or "H" type attenuator pads.

$$R_B = \sqrt{Z_1 Z_2} \Big/ \text{Sinh}(\theta)$$

$$R_A = \frac{Z_1}{\tanh(\theta)} - R_B$$

$$R_C = \frac{Z_2}{\tanh(\theta)} - R_B$$

$$\theta = \left[A'(db)\ \text{Log}_e 10\right] / 20$$

R_A, R_B, R_C = resistor values (ohms)

Z_1 = input impedance

Z_2 = output impedance $Z_1 > Z_2$

A(db) = attentuation (db) minimum (from 00)

A'(db) = attentuation (db) $A' > A$

Note: If you desire $A' = A$, use subroutine 02.

© Wang Laboratories, Inc., 1970

PROGRAM TITLE

DESIGN E. E. DEMO A

NUMBER 1064-2-EE2

PAGE

OPERATING PROCEDURE

PRINTER

1. Key Z_1;
   Z_1 labeled by "Z"
2. Key 03;
3. Key Z_2, GO;
   Z_2 labeled by "Y"
4. READ: A(db) minimum
   A(db) labeled by "L"
5. Key A'(db), GO; (A' > A)
   A'(db) labeled by "L"
6. READ: R_B labeled by "B"
   R_A labeled by "A"
   R_C labeled by "C"

DISPLAY

1. Key Z_1;
2. Key 03;
3. Key Z_2, GO;
4. READ: A(db) minimum
5. Key A'(db), GO; (A' > A)
6. READ: R_B, GO,
   R_A, GO,
   R_C

EXAMPLE: Calculate R_A, R_B and R_C for Z_1 = 93 ohms, Z_2 = 50 ohms and A' = 10db.

1. Key 9 3;
2. Key 03;
3. Key 5 0, GO;
4. READ: 7.201184265
5. Key 1 0, GO;
6. READ:

93.0000	Z
50.0000	Y
7.2011	L
10.000000	L
47.919685	B
65.746980	A
13.191425	C

1. Key 9 3;
2. Key 03;
3. Key 5 0, GO;
4. READ: 7.201184265
5. Key 1 0, GO;
6. READ: 47.91968589, GO,
   65.74698076, GO,
   13.19142521

© Wang Laboratories, Inc., 1970

ATTENUATOR PADS "π" or "θ"

f(x) 04

Calculates resistor values for "π" or "θ" type attenuator pads.

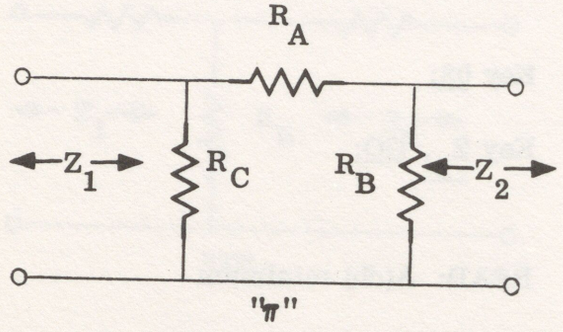

"π"

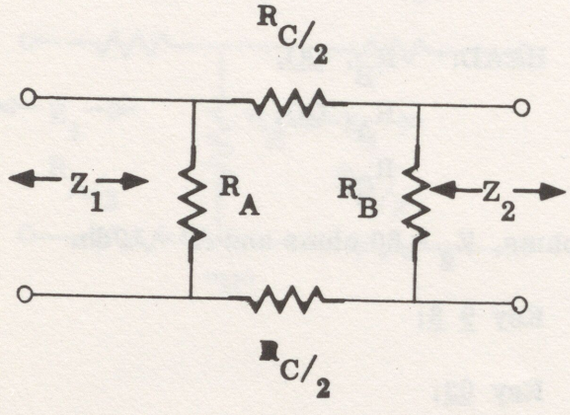

"θ"

$R_A = \sqrt{Z_1 Z_2}\ \sinh(\theta)$

$R_C = Z_1 R_A \tanh(\theta) / (R_A - Z_1 \tanh(\theta))$

$R_B = Z_2 R_A \tanh(\theta) / (R_A - Z_2 \tanh(\theta))$

$\theta = (A'(db) \text{ Log}_e 10)/20$

A (db) = attentuation (db) minimum (from 00)

A′ (db) = attentuation (db) (A′ > A)

Note: If you desire A′ = A, use subroutine 02.

R_A, R_B, R_C = resistor values (ohms)

Z_1 = input impedance (ohms)

Z_2 = output impedance (ohms)

© Wang Laboratories, Inc., 1970

PROGRAM TITLE	NUMBER
DESIGN E. E. DEMO A	1064-2-EE2
	PAGE

OPERATING PROCEDURE

PRINTER

1. Key Z_1;
   Z_1 labeled by "Z"
2. Key 04;
3. Key Z_2, GO;
   Z_2 labeled by "Y"
4. READ: A(db) minimum
   A(db) labeled by "L"
5. Key A′(db), GO;
   A′(db) labeled by "L"
6. READ: R_A labeled by "A"
   R_C labeled by "C"
   R_B labeled by "B"

DISPLAY

1. Key Z_1;
2. Key 04;
3. Key Z_2, GO;
4. READ: A(db) minimum
5. Key A′(db), GO;
6. READ: R_A, GO,
   R_C, GO,
   R_B

EXAMPLE: Calculate R_A, R_B and R_C for Z_1 = 93 ohms, Z_2 = 50 ohms and A′ = 10 db.

1. Key 9 3;
2. Key 04;
3. Key 5 0, GO;
4. READ: 7.201184265
5. Key 1 0, GO;
6. READ:

```
 93.0000          Z
 50.0000          Y
  7.2011          L

 10.000000        L
 97.037363        A
352.501714        C
 70.725681        B
```

1. Key 9 3;
2. Key 04;
3. Key 5 0, GO;
4. READ: 7.201184265
5. Key 1 0, GO;
6. READ: 97.03736393, GO,
   352.5017141, GO,
   70.72568117

© Wang Laboratories, Inc., 1970

520/600 SERIES PROGRAM DESCRIPTION

TITLE	NO.
DESIGN E. E. DEMO B - BAND PASS FILTER DESIGN	1065-2-EE2
	EQUIPMENT: 520-2/600-2
REGISTERS: 00-03, 05-08, 10, 11, 14, 15	MARKS: 1000-1008, 1100, 1101
	DATE: February 18, 1971
	PROGRAMMER: James J. Gibson

BLOCK	VERIFY NO. – PRINT	NO. OF STEPS – PRINT	VERIFY NO. – DISPLAY	NO. OF STEPS – DISPLAY
27	2830	207	2767	207

PROGRAM DESCRIPTION:

This program calculates ideal component values and the frequency response of a proposed band pass filter.

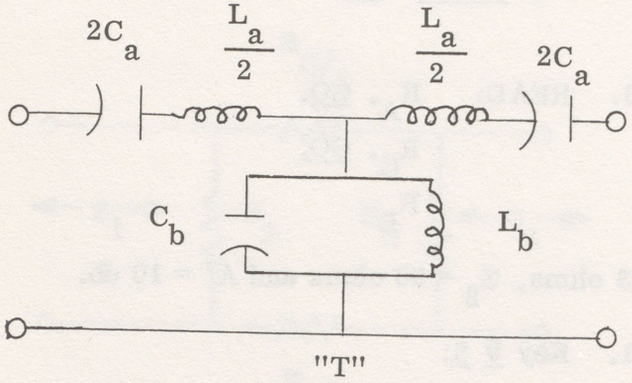

"T"

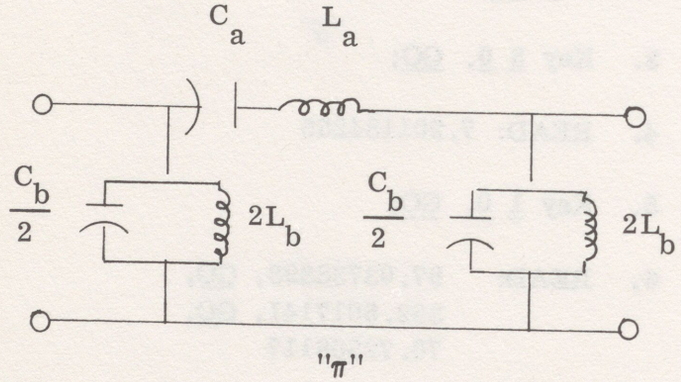

"π"

The ideal component values are calculated by:

$$C_a = \frac{f_2 - f_1}{4\pi f_1 f_2 R}$$ in farads

$$L_a = \frac{R}{\pi (f_2 - f_1)}$$ in henries

$$C_b = \frac{1}{\pi R(f_2 - f_1)}$$ in farads

$$L_b = \frac{R(f_2 - f_1)}{4\pi f_1 f_2}$$ in henries

R = impedance (ohms)

f_1 = low cut-off frequency (cps)

f_2 = high cut-off frequency (cps)

© Wang Laboratories, Inc., 1972

Printed in U.S.A.

PROGRAM TITLE	NUMBER
DESIGN E. E. DEMO B - BAND PASS FILTER DESIGN	1065-2-EE2
	PAGE

The program also calculates frequency response:

$$\frac{X_a}{4X_b} = \frac{(\omega^2 C_a L_a - 1)(1 - \omega^2 C_b L_b)}{4\omega^2 C_a L_b}$$

where $\omega = 2\pi f$

f = frequency at which attenuation, A, is to be evaluated.

Finally, to determine A, the program considers one of the following three conditions:

$$A(db) = \begin{cases} 40 (\text{Log}_{10} e) \sinh^{-1}\left(\sqrt{\frac{X_a}{4X_b}}\right) & \text{IF } \frac{X_a}{4X_b} > 0 \\ 0 & \text{IF } -1 \leq \frac{X_a}{4X_b} \leq 0 \\ 40 (\text{Log}_{10} e) \cosh^{-1}\left(\sqrt{\frac{X_a}{4X_b}}\right) & \text{IF } \frac{X_a}{4X_b} < -1 \end{cases}$$

OPERATING PROCEDURE

PRINTER

1. Key PRIME, LOAD PROGRAM, VERIFY PROGRAM: Display should read 2830
2. Depress f(x), PRINTER ON;
3. Key R;

   R labeled by "I"
4. Key 00;
5. Key f_1, GO;

   f_1 labeled by "L"

DISPLAY

1. Key PRIME, LOAD PROGRAM, VERIFY PROGRAM: Display should read 2767
2. Depress f(x);
3. Key R;
4. Key 00;
5. Key f_1, GO;

© Wang Laboratories, Inc., 1970

PROGRAM TITLE	NUMBER
DESIGN E. E. DEMO B - BAND PASS FILTER DESIGN	1065-2-EE2
	PAGE

6. Key f_2, GO;

   f_2 labeled by "H"

7. READ: C_a labeled by "C"
   L_a labeled by "L"
   C_b labeled by "C"
   L_b labeled by "L"

8. To find frequency response at f,

   Key f, 06;
   f labeled by "F"
   READ: A labeled by "A"
   Repeat step 8 for any additional f

6. Key f_2, GO;

7. READ: C_a, GO;
   L_a, GO;
   C_b, GO;
   L_b

8. To find frequency response at f,

   Key f, 06;

   READ: A
   Repeat step 8 for any additional f.

9. Since you have calculated ideal values of C_a, L_a, C_b and L_b, you may want to change them to desirable values.

   Key 01 This recalls C_a to display

   Key new C_a, GO; This stores new C_a in place of old C_a.

   Key 02 This recalls L_a to display

   Key new L_a, GO; This stores new L_a in place of old L_a.

   Key 03; This recalls C_b to display

   Key new C_b, GO; This stores new C_b in place of old C_b.

   Key 04; This recalls L_b to display

   Key new L_b, GO; This stores new L_b in place of old L_b.

10. To get listing of new values of C_a, L_a C_b, L_b,

    Key 05;

    C_a, C_b, L_a, L_b will be printed out and labeled as in step 7.

10. To re-read new values of C_a, L_a C_b, L_b respectively,

    Key 05 and GO three times

© Wang Laboratories, Inc., 1970

11. To find A for new values of C_a, L_a, C_b, L_b,

    Key f, 06;

    f and A will be printed out and labeled as in step 8.

11. To find A for new values of C_a, L_a, C_b, L_b now in storage,

    Key f, 06;
    READ: A

Note: You can now compare these values of A to the values of A for ideal components.

EXAMPLE: Calculate the ideal component values and the frequency response of a band pass filter with R = 8 ohms, f_1 = 20 cps, f_2 = 20000 cps, and f = 15 cps and 25000 cps.

1. Key PRIME, LOAD PROGRAM, VERIFY PROGRAM: Display should read 2830

2. Depress f(x), PRINTER ON;

3. Key 8;

4. Key 00;

5. Key 2 0, GO;

6. Key 2 0 0 0 0, GO;

7. READ:

```
   8.000000          I
2.000000000 +01      L
2.000000000 +04      H

 .00049686           C
 .00012745           L
 .00000199           C
 .03179915           L
```

1. Key PRIME, LOAD PROGRAM, VERIFY PROGRAM: Display should read 2767

2. Depress f(x);

3. Key 8;

4. Key 00;

5. Key 2 0, GO;

6. Key 2 0 0 0 0, GO;

7. READ: .0004968618, GO,
.0001274514, GO,
.0000019914, GO,
.0317991576

© Wang Laboratories, Inc., 1970

PROGRAM TITLE	NUMBER
DESIGN E. E. DEMO B - BAND PASS FILTER DESIGN	1065-2-EE2
	PAGE

8. a) Key 1 5, 06;
READ:
1.500000000 +01 F
13.82840933 A

b) Key 2 5 0 0 0, 06;
READ:

2.500000000 +04 F
12.05162810 A

9. Key 01;
READ: .0004968618
Key . 0 0 0 5, GO;

Key 02;
READ: .0001274514
Key . 0 0 0 1, GO;

Key 03;
READ: .0000019914
Key . 0 0 0 0 0 2, GO;

Key 04;
READ: .0317991576
Key . 0 5, GO;

10. Key 05;
READ:
.00050000 C
.00010000 L
.00000200 C
.05000000 L

a) Key 1 5, 06;
READ
1.500000000 +01 F
6.00416052 A

b) Key 2 5 0 0 0, 06;
READ:

2.500000000 +04 F
8.07682574 A

8. a) Key 1 5, 06;
READ: 13.82840933

b) Key 2 5 0 0 0, 06;
READ: 12.05162810

9. Key 01;
READ: .0004968618
Key . 0 0 0 5, GO;

Key 02;
READ: .0001274514
Key . 0 0 0 1, GO;

Key 03;
READ: .0000019914
Key . 0 0 0 0 0 2, GO;

Key 04;
READ: .031791576
Key . 0 5, GO;

10. Key 05;
READ: .0005000000, GO,
.0001000000, GO,
.0000020000, GO,
.0500000000

a) Key 1 5, 06;
READ: 6.004160523

b) Key 2 5 0 0 0, 06;
READ: 8.076825745

You can now compare these values of A to the old values of A for ideal components.

© Wang Laboratories, Inc., 1970

520/600 SERIES PROGRAM DESCRIPTION

TITLE	NO.
DESIGN E. E. DEMO C	1066-2-EE2
	EQUIPMENT: 520-2/600-2
REGISTERS: 00-07, 14, 15 / MARKS: 1000-1006	DATE: February 15, 1971
	PROGRAMMER: James J. Gibson

BLOCK	VERIFY NO. – PRINT	NO. OF STEPS – PRINT	VERIFY NO. – DISPLAY	NO. OF STEPS – DISPLAY
28	1379	100	1375	100

PROGRAM DESCRIPTION:

This program calculates voltage gain for circuit below for various R_2 and R_c. We must assume that the frequency is high enough to consider the capacitor a short circuit. We must also assume that the transistor is properly biased.

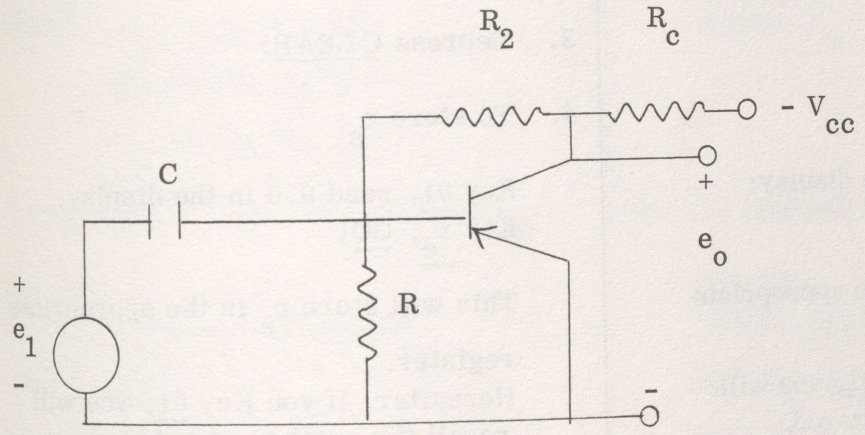

© Wang Laboratories, Inc., 1972

Printed in U.S.A.

PROGRAM TITLE	NUMBER
DESIGN E. E. DEMO C	1066-2-EE2
	PAGE

$$A_v = \frac{e_o}{e_1} = \frac{R_c\,[(1-\alpha)\,r_b\,r_c + r_e\,(r_b + r_c) - R_2\,(\alpha\,r_c - r_e)\,]}{(R_2 + R_c)\,[(1-\alpha)\,r_b\,r_c + r_e\,(r_b + r_c)\,] + R_2\,R_c\,(r_e + r_b)}$$

r_e = emitter resistance (ohms)

r_b = base resistance (ohms)

r_c = collector resistance (ohms)

α = high frequency gain

$A < 0$ implies a phase shift of 180° in voltage of output.

OPERATING PROCEDURE

PRINTER

1. Key PRIME, LOAD PROGRAM, VERIFY PROGRAM: Display should read 1379
2. Depress f(x), PRINTER ON;
3. Depress CLEAR;
4. To store r_e:

   Key 01, read 0.0 in the display;
   Key r_e, GO;

   This will store r_e in the appropriate register.
   Hereafter , if you key 01, you will recall the number you stored.

   What is said for r_e applies to r_b, r_c, α, R_2 and R_c.
5. To store r_b:

   Key 02;
   Key r_b, GO;

DISPLAY

1. Key PRIME, LOAD PROGRAM, VERIFY PROGRAM: Display should read 1375
2. Depress f(x);
3. Depress CLEAR;
4. To store r_e:

   Key 01, read 0.0 in the display;
   Key r_e, GO;

   This will store r_e in the appropriate register.
   Hereafter, if you Key 01, you will recall the number you stored.

   What is said for r_e applies to r_b, r_c, α , R_2 and R_c.
5. To store r_b:

   Key 02;
   Key r_b, GO;

© Wang Laboratories, Inc., 1970

PROGRAM TITLE

DESIGN E. E. DEMO C

NUMBER 1066-2-EE2

PAGE

6. To store r_c:

   Key 03;
   Key r_c, GO;
   (r_c in megohms)

7. To store α:

   Key 04;
   Key α, GO;

8. To store R_2:

   Key 05;
   Key R_2, GO;

9. To store R_c:

   Key 06;
   Key R_c, GO;

10. To evaluate A_v:

    Key 00;
    READ: R_2 labeled by "I"
    R_c labeled by "C"
    A_v labeled by "G"

11. To evaluate A_v for a new value of R_2

    Key 05;
    READ: previously stored R_2
    Key R_2, GO;
    Key 00;
    READ: R_2 labeled by "I"
    R_c labeled by "C"
    A_v labeled by "G"

12. Repeat step 11 for all new values of R_2

6. To store r_c:

   Key 03;
   Key r_c, GO;
   (r_c in megohms)

7. To store α:

   Key 04;
   Key α, GO;

8. To store R_2:

   Key 05;
   Key R_2, GO;

9. To store R_c:

   Key 06;
   Key R_c, GO;

10. To evaluate A_v:

    Key 00;
    READ: A_v

11. To evaluate A_v for a new value of R_2:

    Key 05;
    READ: previously stored R_2
    Key R_2, GO;
    Key 00;
    READ: A_v for new R_2

12. Repeat step 11 for all new values of R_2

© Wang Laboratories, Inc., 1970

PROGRAM TITLE	NUMBER
DESIGN E. E. DEMO C	1066-2-EE2
	PAGE

EXAMPLE: Suppose you have a 2N104 PNP transistor with common emitter connection, biased at -3v.

$$r_e = 155\ \Omega$$

$$r_b = 960\ \Omega$$

$$r_c = 2.95 \times 10^6\ \Omega$$

$$\alpha = .97$$

Let us hold R_c at 5000 Ω and vary R_2.

(R_2 = 10; 50; 100; 500; 1000; 5000; 10,000).

1. Key PRIME, LOAD PROGRAM, VERIFY PROGRAM: Display should read 1379
2. Depress f(x), PRINTER ON;
3. Depress CLEAR;
4. Key 01; READ: 0.0
   Key 1 5 5, GO;
5. Key 02; READ: 0.0
   Key 9 6 0, GO;
6. Key 03; READ: 0.0
   Key 2 . 9 5, GO;
7. Key 04; READ: 0.0
   Key . 9 7, GO;
8. Key 05; READ: 0.0
   Key 1 0, GO;
9. Key 06; READ: 0.0
   Key 5 0 0 0, GO;

1. Key PRIME, LOAD PROGRAM, VERIFY PROGRAM: Display should read 1375
2. Depress f(x);
3. Depress CLEAR;
4. Key 01; READ 0.0
   Key 1 5 5, GO;
5. Key 02; READ: 0.0
   Key 9 6 0, GO;
6. Key 03; READ: 0.0
   Key 2 . 9 5, GO;
7. Key 04; READ: 0.0
   Key . 9 7, GO;
8. Key 05; READ: 0.0
   Key 1 0, GO;
9. Key 06; READ: 0.0
   Key 5 0 0 0, GO;

© Wang Laboratories, Inc., 1970

10. Key 00;
READ:

```
  10.0000          I
5000.0000          C
    .9453          G
```

11. a) Key 05;
READ: 10.00000000

Key 5 0 , GO
Key 00;
READ:

```
  50.0000          I
5000.0000          C
    .7288          G
```

b) Key 05;
READ: 50.00000000
Key 1 0 0 , GO;
Key 00
READ:

```
 100.0000          I
5000.0000          C
    .4630          G
```

A complete sample output is on the following page.

10. Key 00;
READ: .9453324824

11. a) Key 05;
READ: 10.00000000

Key 5 0 , GO
Key 00;
READ: .7288494945

b) Key 05;
READ: 50.00000000
Key 1 0 0 , GO;
Key 00
READ: .4630692344

If you wish to carry out the example further, continue with step 11 and refer to sample output on the following page for truncated answers.

© Wang Laboratories, Inc., 1970

PROGRAM TITLE	NUMBER
DESIGN E. E. DEMO C	1066-2-EE2
	PAGE

```
      10.0000    I
    5000.0000    C
       .9453     G

      50.0000    I
    5000.0000    C
       .7288     G

     100.0000    I
    5000.0000    C
       .4630     G

     500.0000    I
    5000.0000    C
      -1.4875    G

    1000.0000    I
    5000.0000    C
      -3.5570    G

    5000.0000    I
    5000.0000    C
     -12.6244    G

   10000.0000    I
    5000.0000    C
     -17.1350    G
```

© Wang Laboratories, Inc., 1970

520/600 SERIES PROGRAM DESCRIPTION

TITLE	NO.
TCHEBYSHEFF FILTER DESIGN	1067-2-EE2
	EQUIPMENT: 520-2/600-2
REGISTERS: 00,02-07,14,15	MARKS: 1000,1001,1003,1004 1100,1102,1104,1105
	DATE: January, 1972
	PROGRAMMER: James J. Gibson

BLOCK	VERIFY NO. – PRINT	NO. OF STEPS – PRINT	VERIFY NO. – DISPLAY	NO. OF STEPS – DISPLAY
29	2909	211	2666	193

This program calculates the value of each element for the Tchebysheff Filter, normal or dual, in which the Pass Band Ripple, ϵDb, the cut-off frequency, f_c, the resistance, R, and the order of the filter, n, are specified.

The normal filter has a configuration

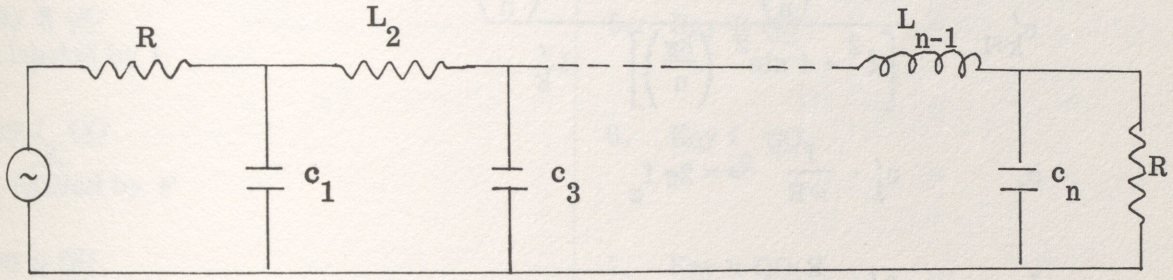

The Dual Filter has a configuration

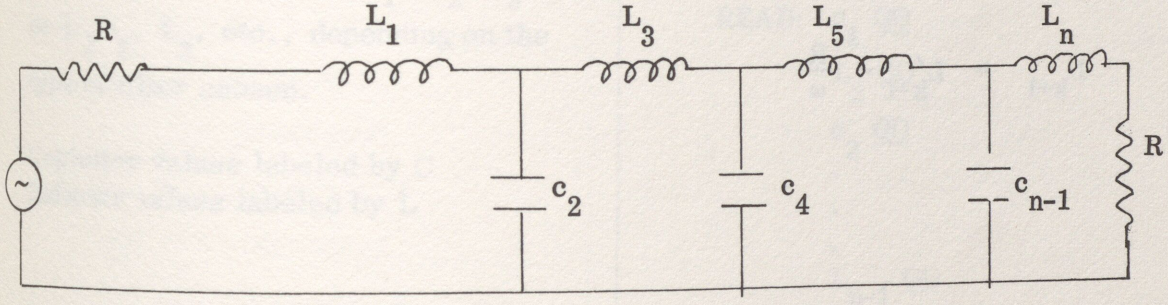

n is odd

© Wang Laboratories, Inc., 1972

Printed in U.S.A.

PROGRAM TITLE	NUMBER
TCHEBYCHEFF FILTER DESIGN	1067-2-EE2
	PAGE

The equations used are:

$$\epsilon = \sqrt{10^{.1\,\epsilon db} - 1}$$

$$\xi = 2 \sinh \left[\frac{1}{n} \text{Log}_e \left(\frac{1}{\epsilon} + \sqrt{1 + \frac{1}{\epsilon^2}} \right) \right]$$

$$c'_1 = \frac{4 \sin \left(\frac{\pi}{2n} \right)}{\xi} = L'_1$$

$$L'_{k+1} = \frac{8 \cos \left(\frac{\pi}{n} \right) + 8 - 16 \cos^2 \left(\frac{k\pi}{n} \right)}{\left[\xi^2 + 4 \sin^2 \left(\frac{k\pi}{n} \right) \right] \; c'_k}$$

$$c'_{k+1} = \frac{8 \cos \left(\frac{\pi}{n} \right) + 8 - 16 \cos^2 \left(\frac{k\pi}{n} \right)}{\left[\xi^2 + 4 \sin^2 \left(\frac{k\pi}{n} \right) \right] \; L'_k}$$

$$c_1 = c'_1 \cdot \frac{1}{\omega R} \qquad \omega = 2\pi f_c$$

$$L_1 = L'_1 \cdot \frac{R}{\omega}$$

$$c_{k+1} = c'_{k+1} \cdot \frac{1}{R\omega}$$

$$L_{k+1} = L'_{k+1} \cdot \frac{R}{\omega}$$

© Wang Laboratories, Inc., 1970

PROGRAM TITLE	NUMBER
TCHEBYSCHEFF FILTER DESIGN	1067-2-EE2
	PAGE

OPERATING PROCEDURE

PRINTER

1. Load block number 29;
2. Key VERIFY PROGRAM: Display should read 2909;
3. Depress f(x), PRINTER ON;
4. Key ϵdb 00 if NORMAL FILTER is desired
   or
   ϵdb 01 if DUAL FILTER is desired;

   ϵdb labeled by E
5. Key R GO
   R labeled by I;
6. Key f_c GO
   f_c labeled by F
7. Key n GO
   n labeled by M
8. Program will calculate all elements of the filter in order, i.e. c_1, L_2, c_3 etc. or L_1, c_2, L_3, etc., depending on the type of filter chosen.

   Capicitor values labeled by C
   Inductor values labeled by L

DISPLAY

1. Load block number 29;
2. Key VERIFY PROGRAM: Display should read 2666;
3. Depress f(x);
4. Key ϵdb 00 if NORMAL FILTER is desired
   or
   ϵdb 01 if DUAL FILTER is desired;
5. Key R GO;
6. Key f_c GO;
7. Key n GO;
8. If normal filter was chosen

   READ: c_1 GO
   L_2 GO
   c_3 GO
   .
   .
   .
   L_{n-1} GO
   c_n

© Wang Laboratories, Inc., 1970

If dual filter was chosen

READ: L_1 GO
c_2 GO
L_3 GO
.
.
.
c_{n-1} GO
L_n

EXAMPLE 1: Calculate the values of each element of a normal filter of order 5 for which $\epsilon db = 1/2$, R = 50 ohms and $f_c = 10^8$ cps.

1. Load block number 29;
2. Key VERIFY PROGRAM: Display should read 2909;
3. Depress f(x), PRINTER ON;
4. Key . 5 00;
5. Key 5 0 GO;
6. Key 1 SET EXP 8 GO;
7. Key 5 GO;
8. READ:

.5000	E
50.00	I
1.000000000+08	F
5.	M
5.429634925-11	C
9.785058673-08	L
8.087704292-11	C
9.785058672-08	L
5.429634926-11	C

1. Load block number 29;
2. Key VERIFY PROGRAM: Display should read 2666;
3. Depress f(x);
4. Key . 5 00;
5. Key 5 0 GO;
6. Key 1 SET EXP 8 GO;
7. Key 5 GO;
8. READ:

5.429634925 - 11 = c_1 GO
.0000000978 = L_2 GO
8.087704291 - 11 = c_3 GO
.0000000978 = L_4 GO
5.429634925 - 11 = c_5

© Wang Laboratories, Inc., 1970

PROGRAM TITLE

TCHEBYSCHEFF FILTER DESIGN

NUMBER 1067-2-EE2

PAGE

EXAMPLE 2: Calculate values of each element of a dual filter of order 5, for which ϵdb = 1/2, R = 50 ohms, and $f_c = 10^8$ cps.

1. Load block number 29;
2. Key VERIFY PROGRAM: Display should read 2909;
3. Depress f(x), PRINTER ON;
4. Key . 5 01;
5. Key 5 0 GO;
6. Key 1 SET EXP 8 GO;
7. Key 5 GO;
8. READ:

.5000	E
50.00	I
1.000000000+08	F
5.	M
1.357408731-07	L
3.914023469-11	C
2.021926073-07	L
3.914023469-11	C
1.357408731-07	L

1. Load block number 29;
2. Key VERIFY PROGRAM: Display should read 2666;
3. Depress f(x);
4. Key . 5 01;
5. Key 5 0 GO;
6. Key 1 SET EXP 8 GO;
7. Key 5 GO;
8. READ:

.0000001357 = L_1 GO

3.914023469 - 11 = c_2 GO

.0000002021 = L_3 GO

3.914023469 - 11 = c_4 GO

.0000001357 = L_5

© Wang Laboratories, Inc., 1970

520/600 SERIES PROGRAM DESCRIPTION

TITLE	NO.
BUTTERWORTH FILTER DESIGN	1068-2-EE2
	EQUIPMENT: 520-2/600-2
REGISTERS: 00-04, 06, 07, 14, 15	MARKS: 1000, 1001, 1004, 1005, 1006, 1100-1105
	DATE: January, 1972
	PROGRAMMER: James Gibson

BLOCK	VERIFY NO. – PRINT	NO. OF STEPS – PRINT	VERIFY NO. – DISPLAY	NO. OF STEPS – DISPLAY
30	2745	225	2216	182

PROGRAM DESCRIPTION:

This program calculates the value of each element for two types of filter: normal and dual.

The normal filter has the following configuration:

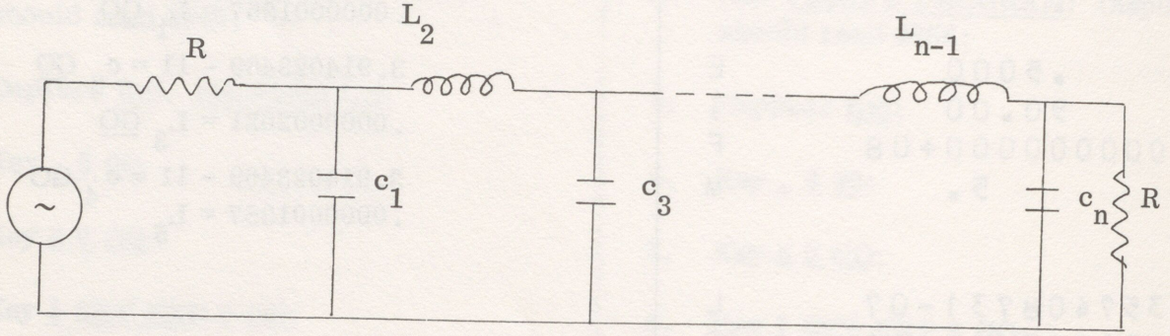

The dual filter has the following configuration:

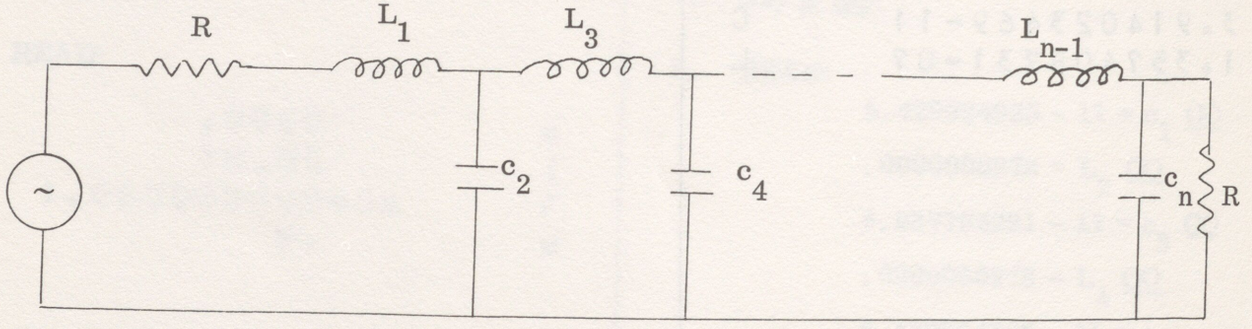

© Wang Laboratories, Inc., 1972

Printed in U.S.A.

PROGRAM TITLE	NUMBER
BUTTERWORTH FILTER DESIGN	1068-2-EE2
	PAGE

n can be either odd or even so that it is possible for each configuration to be terminated by a capacitor or an inductor. The user decides upon the values of R, the cut-off frequency, f_c, and the order of the filter, n.

OPERATING PROCEDURE

PRINTER

1. Key PRIME, LOAD PROGRAM, VERIFY PROGRAM: Display should read 2745;
2. Depress f(x), PRINTER ON;
3. Key n 00 for normal filter
   or
   Key n 01 for dual filter
   n labeled by M;
4. Key R GO;
   R labeled by I
5. Key f_c GO;
   f_c labeled by F
6. Program will print the values of the elements in order; If normal was selected read c_1, L_2, c_3, L_4 etc.
   If dual was selected read L_1, c_2, L_3, c_4 etc.
   Capacitor values labeled by C
   Inductor values labeled by L

DISPLAY

1. Key PRIME, LOAD PROGRAM, VERIFY PROGRAM: Display should read 2216;
2. Depress f(x);
3. Key n 00 for normal filter
   or
   Key n 01 for dual filter;
4. Key R GO;
5. Key f_c GO;
6. If normal filter was chosen,
   READ: c_1 Key GO
   L_2 GO
   c_3 GO
   L_4 GO
   .
   .
   .
   L_{n-1} GO
   c_n

© Wang Laboratories, Inc., 1970

PROGRAM TITLE	NUMBER
BUTTERWORTH FILTER DESIGN	1068-2-EE2
	PAGE

If dual filter was chosen,

READ: L_1 Key GO

c_2 GO

L_3 GO

c_4 GO

.

.

.

L_{n-1} GO

c_n

EXAMPLE: Calculate values of each element of a normal filter of order 7 for which $R = 300$ and $f_5 = 10000$.

1. Key PRIME, LOAD PROGRAM, VERIFY PROGRAM: Display should read 2745;
2. Depress f(x), PRINTER ON;
3. Key 7 00;
4. Key 3 0 0 GO;
5. Key 1 0 0 0 0 GO;

READ:

```
          7.          M
    300.0000          I
1.000000000+04        F

2.361020438-08        C
5.953889036-03        L
9.559576593-08        C
9.549296585-03        L
9.559576593-08        C
5.953889037-03        L
2.361020440-08        C
```

1. Key PRIME, LOAD PROGRAM, VERIFY PROGRAM: Display should read 2216;
2. Depress f(x);
3. Key 7 00;
4. Key 3 0 0 GO;
5. Key 1 0 0 0 0 GO

READ: $.0000000236 = c_1$, GO;

$.0059538890 = L_2$, GO;

$.0000000955 = c_3$, GO

$.0095492965 = L_4$, GO;

$.0000000955 = c_5$, GO;

$.0059538890 = L_6$, GO;

$.0000000236 = c_7$

© Wang Laboratories, Inc., 1970

II. To help you find the correct number of elements you need, you may use the following:

Suppose we know the cut-off frequency, f_c and the ϵdb we desire at skirt rejection frequency f_c. We can calculate n, the number of elements we need by

$$n = \text{integer}\left(\frac{\text{Log}_{10}\sqrt{10^{.1\,\epsilon db}-1}}{\text{Log}_{10}\,\bar{\omega}} + 1\right)$$

where $\bar{\omega}$ normalized frequency $\frac{f_s}{f_c}$.

We always assume ϵdb = 3db at $\bar{\omega} = 1$, however, there may be cases where some other ϵdb_x is required at $\bar{\omega} = 1$, in such case we would find $\bar{\omega}_x$ using ϵdb_x and the calculated n by:

$$\bar{\omega} = 10^{\left[\frac{\text{Log}_{10}\sqrt{10^{.1\,\epsilon db_x}-1}}{n}\right]}$$

and see how close it is to 1. If it is sufficiently close, use the n that has been calculated; If not, chose a different n.

OPERATING PROCEDURE

PRINTER

1. Key PRIME, LOAD PROGRAM, VERIFY PROGRAM: Display should read 2745;
2. Depress f(x), PRINTER ON;
3. Key f_c 04;
   f_c labeled by C
4. Key ϵdb at f_s GO;
   ϵdb labeled by E
5. Key f_s GO;
   f_s labeled by F

DISPLAY

1. Key PRIME, LOAD PROGRAM, VERIFY PROGRAM: Display should read 2216;
2. Depress f(x);
3. Key f_c 04;
4. Key ϵdb at f_s GO;
5. Key f_s GO;

© Wang Laboratories, Inc., 1970

PROGRAM TITLE	NUMBER
BUTTERWORTH FILTER DESIGN	1068-2-EE2
	PAGE

6a. If you wish 3db at f_c,

Key GO;

b. If you wish some other ϵdb at f_c,

Key ϵdb 05
ϵdb labeled by X

7a. If you selected 6a,
READ: n labeled by M

b. If you selected 6b,
READ: n labeled by M
$\bar{\omega}_x$ labeled by X

6a. If you wish 3db at f_c,

Key GO;

b. If you wish some other ϵdb at f_c,

Key ϵdb 05
ϵdb labeled by X

7a. If you selected 6a,
READ: n

b. If you selected 6b,
READ: n GO
$\bar{\omega}_x$

EXAMPLE 1: Given

$f_c = 10$kc
$f_s = 20$ kc
ϵdb = 40 at f_s
ϵdb = 3 at f_c
Find n

1. Load block number 30;
2. Key VERIFY PROGRAM: Display should read 2745;
3. Depress f(x), PRINTER ON;
4. Key 1 0 0 0 0 04;
5. Key 4 0, GO;
6. Key 2 0 0 0 0 GO;
7. Key GO;

1. Load block number 30;
2. Key VERIFY PROGRAM: Display should read 2216;
3. Depress f(x);
4. Key 1 0 0 0 0 04;
5. Key 4 0, GO;
6. Key 2 0 0 0 0 GO;
7. Key GO;

© Wang Laboratories, Inc., 1970

8. READ:

```
1.000000000+04      C
   40.00000         E
2.000000000+04      F

        7.          M
```

8. READ: 7.000000000 = n

EXAMPLE 2: Suppose we want 1db from 0 to 5 kc, and 20db above 15kc

$f_c = 5000$ $\epsilon db_x = 1$

$f_s = 15,000$ $\epsilon db = 20$

1. Load block number 30;
2. Key VERIFY PROGRAM: Display should read 2745;
3. Depress f(x), PRINTER ON;
4. Key 5 0 0 0 04;
5. Key 2 0 GO;
6. Key 1 5 0 0 0 GO;
7. Key 1 05;
8. READ:

```
5.000000000+03      C
   20.00000         E
1.500000000+04      F
    1.00000         X

        3.          M

     .79835         X
```

1. Load block number 30;
2. Key VERIFY PROGRAM: Display should read 2216;
3. Depress f(x);
4. Key 5 0 0 0 04;
5. Key 2 0 GO;
6. Key 1 5 0 0 0 GO;
7. Key 1 05;
8. READ: 3.000000000 = n GO
   .7983543553 = $\overline{\omega}_x$

© Wang Laboratories, Inc., 1970

PROGRAM TITLE	NUMBER
BUTTERWORTH FILTER DESIGN	1068-2-EE2
	PAGE

III. You may wish to find ϵdb given n and $\bar{\omega}$ from

$$\epsilon\,\text{db} = -10\ \text{Log}_{10}\left(\frac{1}{1+\bar{\omega}^{2n}}\right)$$

OPERATING PROCEDURE

PRINTER

1. Load block number 30;
2. Key VERIFY PROGRAM: Display should read 2745;
3. Depress f(x), PRINTER ON;
4. Key $\bar{\omega}$, 06;
   $\bar{\omega}$ labeled by F
5. Key n, GO;
   n labeled by M
6. READ: ϵdb labeled by E

EXAMPLE: Find ϵdb for $\bar{\omega} = .6$ and $n = 2$
$\bar{\omega} = 1$ and $n = 3$
$\bar{\omega} = 4$ and $n = 5$
$\bar{\omega} = 100$ and $n = 3$

1. Load block number 30;
2. Key VERIFY PROGRAM: Display should read 2745;

DISPLAY

1. Load block number 30;
2. Key VERIFY PROGRAM: Display should read 2216;
3. Depress f(x);
4. Key $\bar{\omega}$ 06;
5. Key n, GO;
6. READ: ϵdb

1. Load block number 30;
2. Key VERIFY PROGRAM: Display should read 2216;

© Wang Laboratories, Inc., 1970

PROGRAM TITLE	NUMBER
BUTTERWORTH FILTER DESIGN	1068-2-EE2
	PAGE

3. Depress f(x), PRINTER ON;

4. Key . 6 06;

5. Key 2 GO;

6. READ:

```
   .600        F
     2.        M

 .52924        E
```

Similarly
Key 1 06;

Key 3 GO;
READ:

```
  1.000        F
     3.        M

3.01029        E
```

Key 4 06;

Key 5 GO;
READ:

```
  4.000        F
     5.        M

60.20600       E
```

3. Depress f(x);

4. Key . 6 06;

5. Key 2 GO;

6. READ: .5292468370

Similarly
Key 1 06;

Key 3 GO;
READ: 3.010299956

Key 4 06;

Key 5 GO;
READ: 60.20600327

© Wang Laboratories, Inc., 1970

PROGRAM TITLE	NUMBER
BUTTERWORTH FILTER DESIGN	1068-2-EE2
	PAGE

Key 1 0 0 06;

Key 3 GO;
READ:

```
100.000          F
      3.         M

.120.00000       E
```

Key 1 0 0 06;

Key 3 GO;
READ: 120.0000000

© Wang Laboratories, Inc., 1970

520/600 SERIES PROGRAM DESCRIPTION

TITLE	NO.
Y - Δ AND Δ - Y TRANSFORMATION	1069-2-EE1
	EQUIPMENT: 520-2/600-2

REGISTERS	MARKS	DATE	PROGRAMMER
00-16	1000-1001, 1002, 1004, 1100-1105	June, 1971	James J. Gibson

BLOCK	VERIFY NO. – PRINT	NO. OF STEPS – PRINT	VERIFY NO. – DISPLAY	NO. OF STEPS – DISPLAY
31	3506	252	3480	252

PROGRAM DESCRIPTION:

This program calculates the Y-connected impedances (Z_a, Z_b, Z_c) from the Δ connected impedances (Z_{ab}, Z_{be}, Z_{ea}) that provide equivalence and vice versa.

Consider the following diagram.

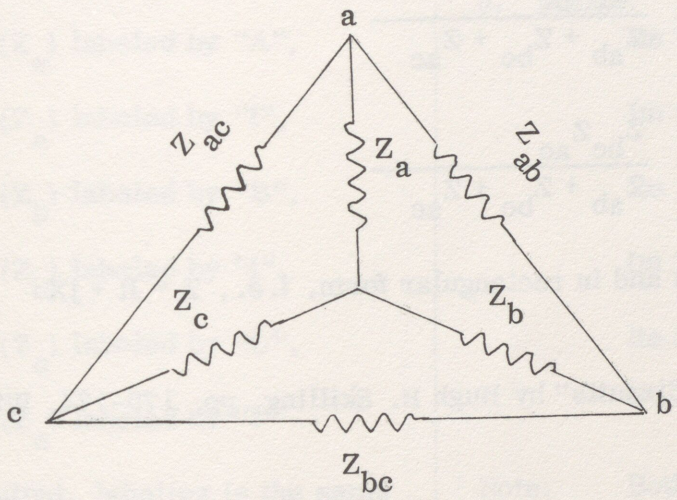

Using the following law we can get the Y ⟶ Δ equivalence equations:

> The impedance of any side of the equivalent Δ is equal to the sum of the three products of Y impedances multiplied together in pairs, divided by the impedance of the opposite branch of the Y

Therefore:

$$Z_{ab} = \frac{Z_a Z_b + Z_b Z_c + Z_c Z_a}{Z_c}$$

© Wang Laboratories, Inc., 1972

Printed in U.S.A.

PROGRAM TITLE	NUMBER
Y - Δ AND Δ - Y TRANSFORMATION	1069-2-EE1
	PAGE

$$Z_{bc} = \frac{Z_a Z_b + Z_b Z_c + Z_c Z_a}{Z_a}$$

$$Z_{ac} = \frac{Z_a Z_b + Z_b Z_c + Z_c Z_a}{Z_b}$$

Using the following law we can get the Δ ⟶ Y equivalence equations:

> The impedance of any branch of the Y is equal to the product of the two adjacent sides of the Δ divided by the sum of the three Δ impedances.

Therefore:

$$Z_a = \frac{Z_{ab} Z_{ac}}{Z_{ab} + Z_{bc} + Z_{ac}}$$

$$Z_b = \frac{Z_{ab} Z_{bc}}{Z_{ab} + Z_{bc} + Z_{ac}}$$

$$Z_c = \frac{Z_{bc} Z_{ac}}{Z_{ab} + Z_{bc} + Z_{ac}}$$

The input data must be in ohms and in rectangular form, i.e., $Z = R + jX$

Ref: "Electrical Engineering Circuits" by Hugh H. Skilling, pp. 170-174, Wiley & Sons, Inc. 1963.

OPERATING PROCEDURE

PRINTER

1. Key PRIME, LOAD PROGRAM, VERIFY PROGRAM: Display should read 3506;
2. Depress f(x), PRINTER ON;

DISPLAY

1. Key PRIME, LOAD PROGRAM, VERIFY PROGRAM: Display should read 3480;
2. Depress f(x);

© Wang Laboratories, Inc., 1970

PROGRAM TITLE

Y - Δ AND Δ - Y TRANSFORMATION

NUMBER 1069-2-EE1

PAGE

3. Key Re Z_{ab} (Z_a), 00,

Im Z_{ab} (Z_a), GO;

Key Re Z_{bc} (Z_b), 01,

Im Z_{bc} (Z_b), GO,

Key Re Z_{ac} (Z_c), 02,

Im Z_{ac} (Z_c), GO;

Note: Input will be printed when transformation is selected.

4a. For Y ⟶ Δ Key 04;
b. For Δ ⟶ Y Key 05;

5. READ:

Re Z_{ab} (Z_a) labeled by "A",

Im Z_{ab} (Z_a) labeled by "I",

Re Z_{bc} (Z_b) labeled by "B",

Im Z_{bc} (Z_b) labeled by "I",

Re Z_{ac} (Z_c) labeled by "C",

Im Z_{ac} (Z_c) labeled by "I"

Note: In the output, labeling is the same as the input.

3. Key Re Z_{ab} (Z_a), 00,

Im Z_{ab} (Z_a), GO;

Key Re Z_{bc} (Z_b), 00,

Im Z_{bc} (Z_b), GO;

Key Re Z_{ac} (Z_c), 00,

Im Z_{ac} (Z_c), GO;

4a. For Y ⟶ Δ Key 04;
b. For Δ ⟶ Y Key 05;

5. READ:

Re Z_{ab} (Z_a), GO,

Im Z_{ab} (Z_a), GO,

Re Z_{bc} (Z_b), GO,

Im Z_{bc} (Z_b), GO,

Re Z_{ac} (Z_c), GO,

Im Z_{ac} (Z_c);

Note: Both input and output will appear on display.

Note: The input values remain in storage unchanged, therefore, if you wish to change one or more components leaving the rest unchanged, use the appropriate steps(s) 1, 2 or 3. Then use step 4a or b for appropriate conversion.

EXAMPLE #1: Δ ⟶ Y

$Z_{ab} = 0 + j5$

$Z_{bc} = 0 + j5$

$Z_{ac} = 10 + j0$

© Wang Laboratories, Inc., 1970

PROGRAM TITLE

Y - Δ AND Δ - Y TRANSFORMATION

NUMBER 1069-2-EE1

PAGE

PRINTER

1. Key PRIME, LOAD PROGRAM, VERIFY PROGRAM: Display should read 3506;

2. Depress f(x), PRINTER ON;

3. Key 0, 00,
   5, GO;
   Key 0, 01,
   5, GO;
   Key 10, 02,
   0, GO;

4. Key 05;

5. READ:

0.000000000	A
5.000000000	I
0.000000000	B
5.000000000	I
10.00000000	C
0.000000000	I
2.500000000	A
2.500000000	I
-1.250000000	B
1.250000000	I
2.500000000	C
2.500000000	I

DISPLAY

1. Key PRIME, LOAD PROGRAM, VERIFY PROGRAM: Display should read 3480;

2. Depress f(x);

3. Key 0, 00,
   5, GO;
   Key 0, 01,
   5, GO;
   Key 10, 02,
   0, GO;

4. Key 05;

5. READ:

0.000000000, GO,
5.000000000, GO,
0.000000000, GO,
5.000000000, GO,
10.00000000, GO,
0.000000000, GO,
2.500000000, GO,
2.500000000, GO,
-1.250000000, GO,
1.250000000, GO,
2.500000000, GO,
2.500000000;

EXAMPLE #2: Y ⟶ Δ

$Z_{ab} = .5 + j0$

$Z_{bc} = .3333 + j0$

$Z_{ac} = 1 + j0$

© Wang Laboratories, Inc., 1970

PROGRAM TITLE

Y - Δ AND Δ - Y TRANSFORMATION

NUMBER 1069-2-EE1

PAGE

PRINTER

1. Key PRIME, LOAD PROGRAM, VERIFY PROGRAM: Display should read 3506;

2. Depress f(x), PRINTER ON;

3. Key . 5, 00,
   0, GO;
   Key . 3 3 3 3, 01,
   0, GO;
   Key 1, 02,
   0, GO;

4. Key 04;

5. READ:

```
.5000000000      A
0.000000000      I

.3333000000      B
0.000000000      I

1.000000000      C
0.000000000      I


.9999500000      A
0.000000000      I

1.999900000      B
0.000000000      I

3.000150015      C
0.000000000      I
```

DISPLAY

1. Key PRIME, LOAD PROGRAM, VERIFY PROGRAM: Display should read 3480;

2. Depress f(x);

3. Key . 5, 00,
   0, GO;
   Key . 3 3 3 3, 01,
   0, GO;
   Key 1, 02,
   0, GO;

4. Key 04;

5. READ:

```
.5000000000, GO,
0.000000000, GO,
.3333000000, GO,
0.000000000, GO,
1.000000000, GO,
0.000000000, GO,
.9999500000, GO,
0.000000000, GO,
1.999900000, GO,
0.000000000, GO,
3.000150015, GO,
0.000000000;
```

© Wang Laboratories, Inc., 1970

To help us to provide you with the best program libraries possible, please make your comments and suggestions concerning this publication on the form below. Then detach, fold, tape closed and mail to us. All comments and suggestions become the property of Wang Laboratories, Inc. For a reply, be sure to include your name and address. Your cooperation is appreciated.

TITLE OF PUBLICATION:

COMMENTS

Fold

Fold

Cut along dotted line.

(Please tape. Postal regulations prohibit the use of staples.)

WANG

Fold

FIRST CLASS
PERMIT NO. 16
Tewksbury, Mass.

BUSINESS REPLY MAIL
NO POSTAGE STAMP NECESSARY IF MAILED IN THE UNITED STATES

— POSTAGE WILL BE PAID BY —

WANG LABORATORIES, Inc.
836 NORTH STREET
TEWKSBURY, MASSACHUSETTS 01876

Attention: Programming Department

Fold

Cut along dotted line.

Printed in U.S.A.

WANG
LABORATORIES, INC

836 North Street
Tewksbury, Massachusetts 01876
TELEPHONE (617) 851-7311
TWX 710-343-6769
TELEX 94-7421

WANG LABORATORIES (CANADA) LTD.
180 Duncan Mill Road
Don Mills, Ontario
TELEPHONE (416) 449-7890
TELEX 06-21-7549

WANG EUROPE, S.A.
Rue Anatole France 115-121
1030 Brussels, Belgium
TELEPHONE 15.48.01/02/03

WANG ELECTRONICS LTD.
40-44 High Street
Northwood, Middlesex, England
TELEPHONE Northwood 27677

WANG FRANCE SARL
47 Rue de la Chapelle
Paris 18, France
TELEPHONE 203.27.94 or 203.25.94

WANG LABORATORIES GMBH
Moselstrasse No. 4
6000 Frankfurt am Main
West Germany
TELEPHONE (611) 23-00-40

WANG SKANDINAVISKA AB
Fredsgatan 17
S-172 33
Sundbyberg, Sweden
TELEPHONE 98-12-45

WANG NEDERLAND N.V.
Damstraat 2
Utrecht, Netherlands
TELEPHONE 030-980947

WANG PACIFIC LTD.
61, King Yip Street, 1st Floor
Kwun Tong, Kowloon, Hong Kong
TELEPHONE K-444536

WANG INDUSTRIAL CO., LTD.
9, Sec. 5, Nanking East Road
Taipei, Taiwan
TELEPHONE 77.96.19 or 71.35.78

WANG MEDICAL SYSTEMS, INC.
836 North Street
Tewksbury, Massachusetts 01876
TELEPHONE (617) 851-7311
TWX 710-343-6769
TELEX 94-7421

PHI COMPUTER SERVICES, INC.
800 Massachusetts Avenue
Arlington, Massachusetts 02174
TELEPHONE (617) 648-8550

WANG ELECTRONIK GESELLSCHAFT MBH
Grinzinger Allee 16
1190 Wien 19
Austria
TELEPHONE (0222) 32.42.43

Printed in U.S.A.
700-0605
3-72-3M
Price: $20.00