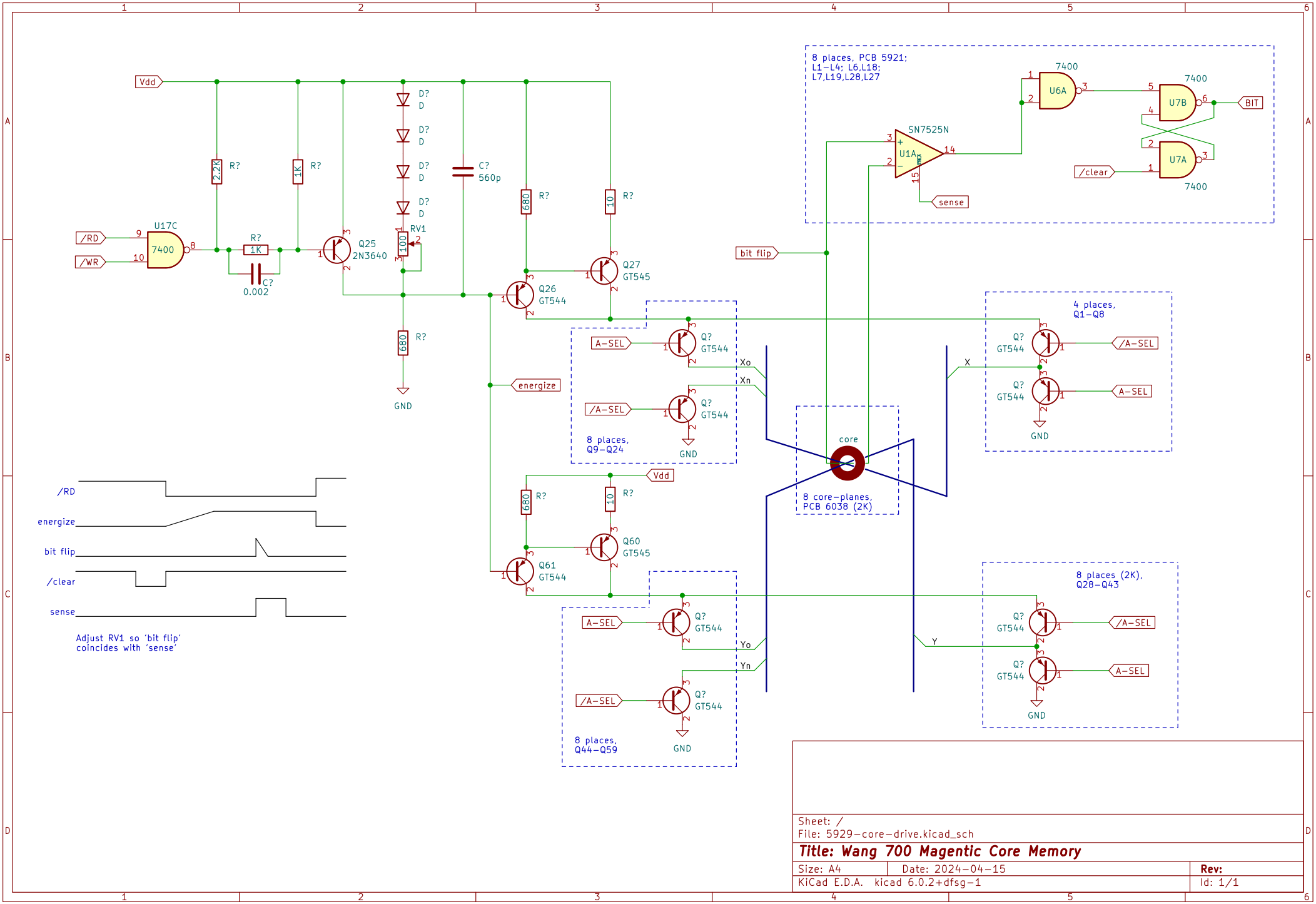

Sheet: /
File: 5929–core–drive.kicad_sch

Title: Wang 700 Magentic Core Memory

Size: A4	Date: 2024–04–15	Rev:
KiCad E.D.A. kicad 6.0.2+dfsg–1		Id: 1/1